REPLACEMENT PART GUIDE – S113

See graphics below for Summit part numbers and descriptions of service parts.
Valid for product manufactured 6/2014 to present.

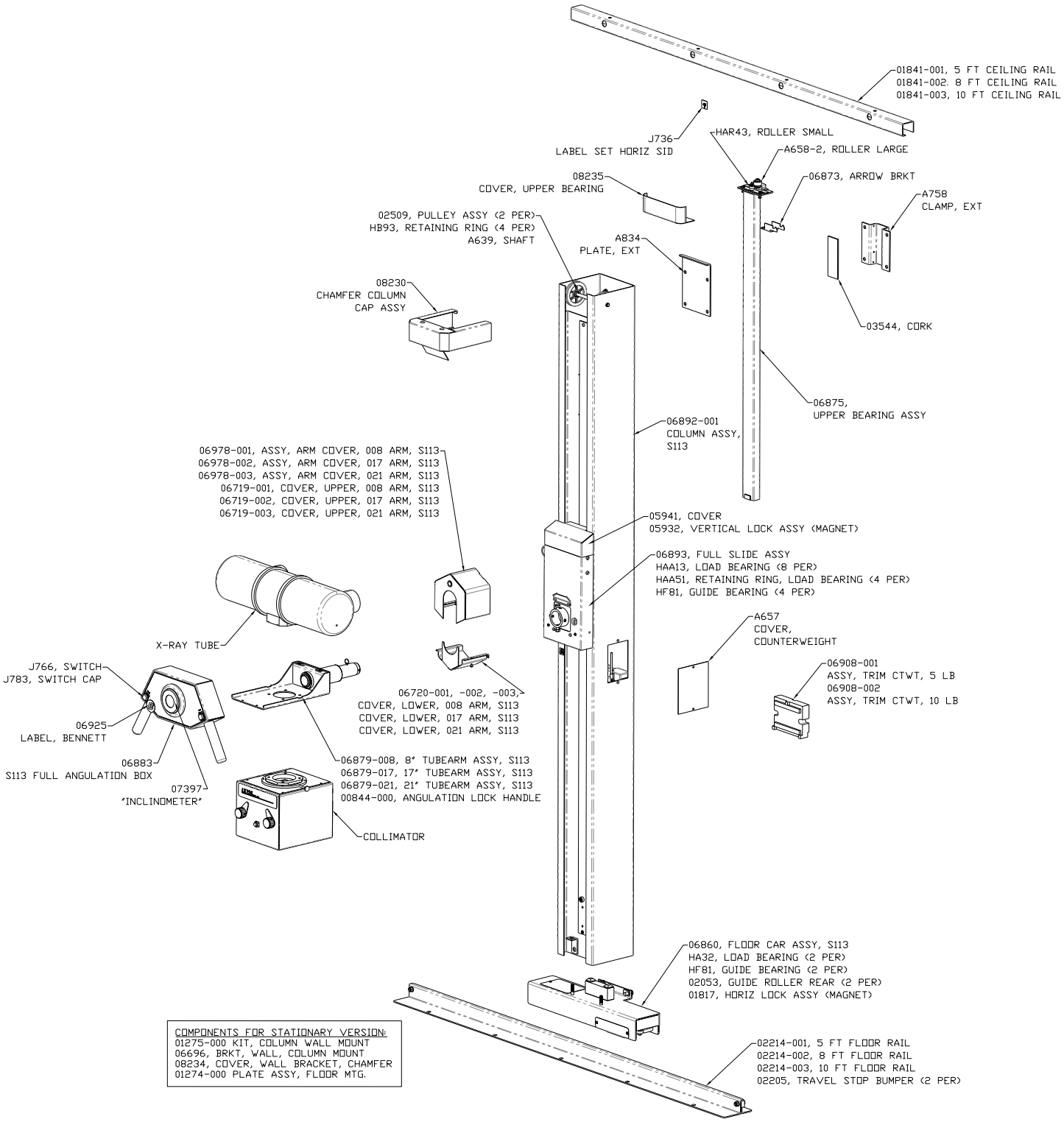

08594 Rev. B