REPLACEMENT PART GUIDE – S225

See graphics on the following pages for Summit part numbers and descriptions of service parts.
Valid for product MANUFACTURED 12/01/2014 to present. 08673-002 box option added BPB526-0224

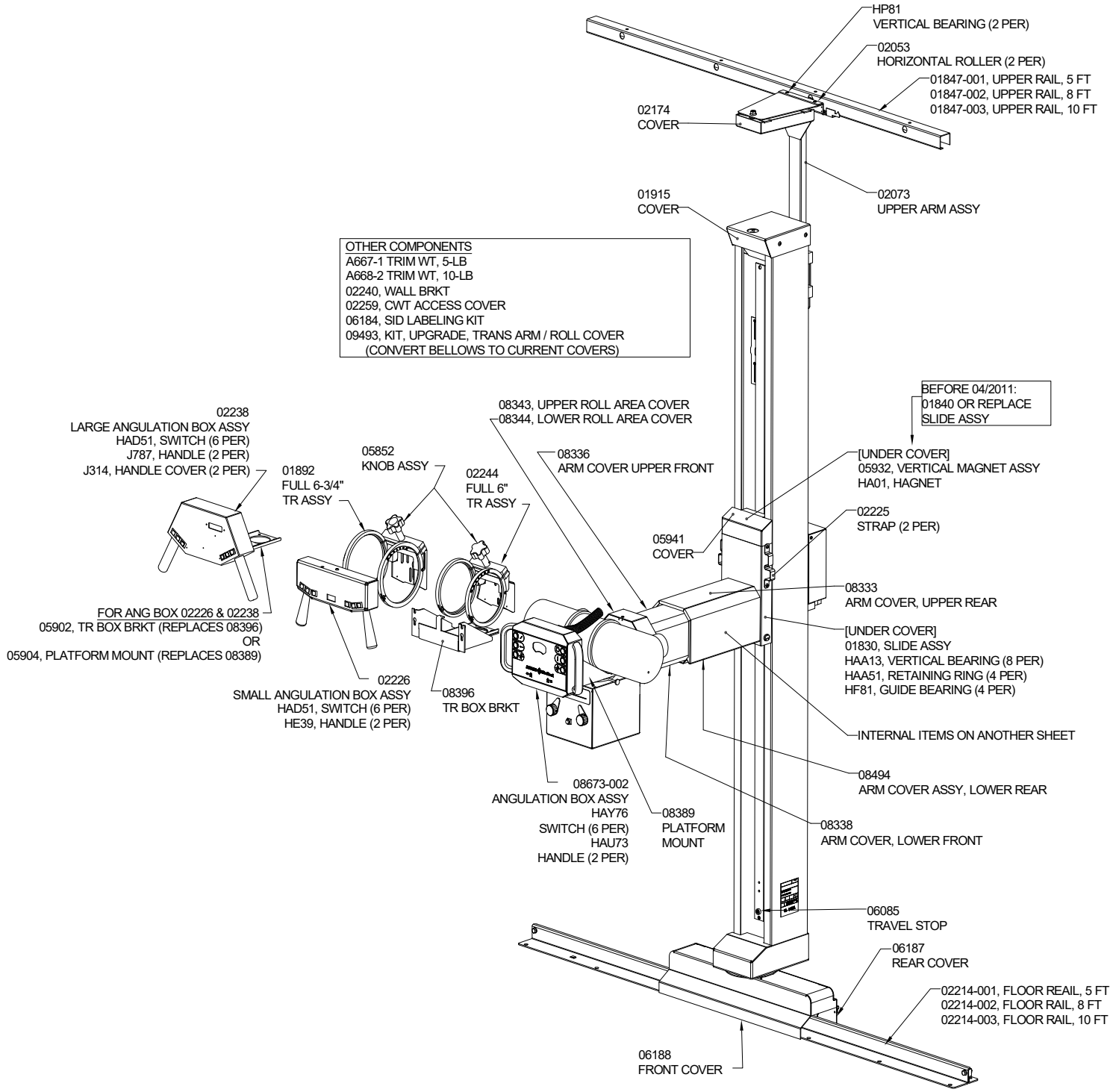

08432 Rev. F

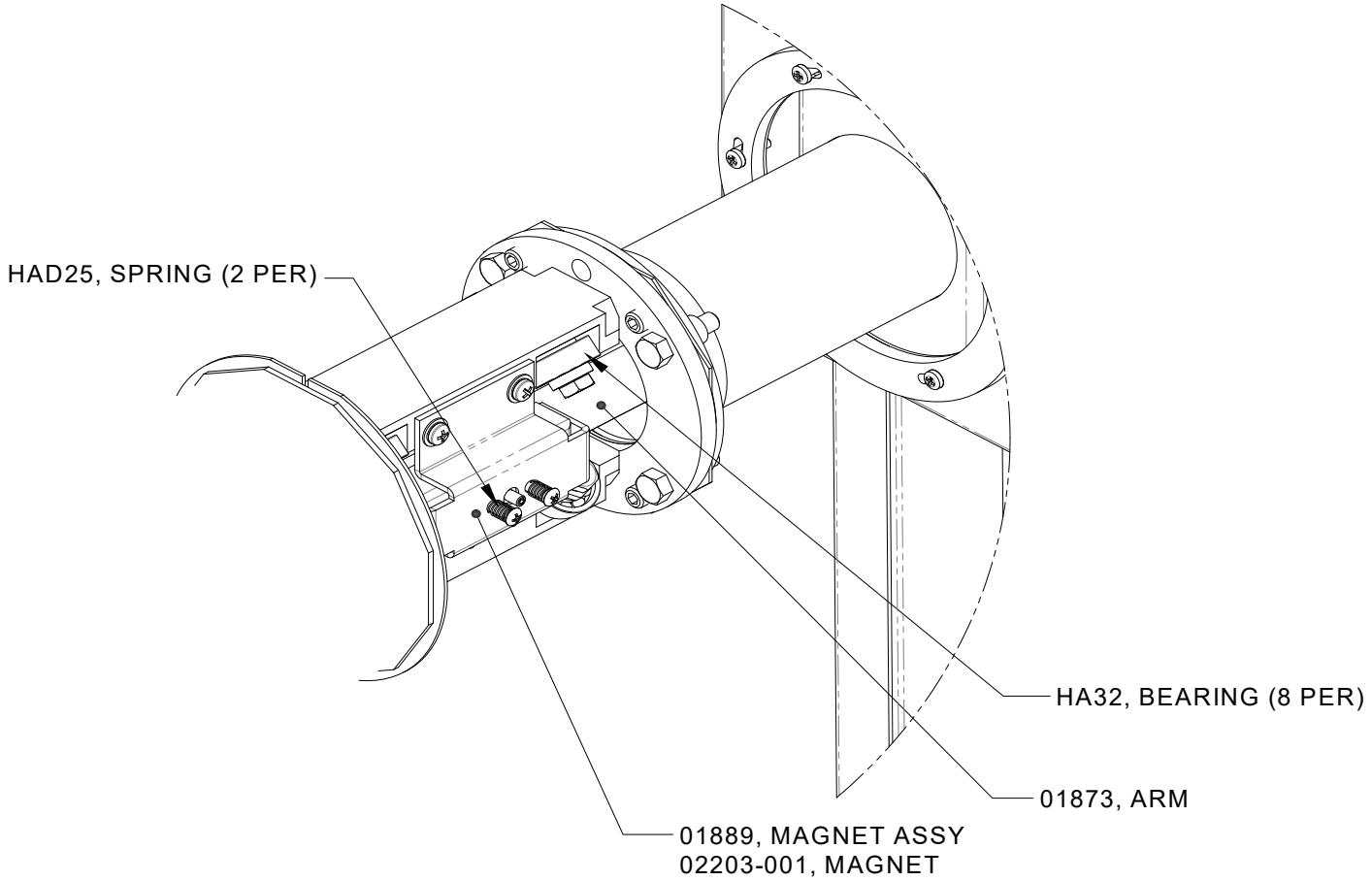
HAD25, SPRING (2 PER)
HA32, BEARING (8 PER)
01873, ARM
01889, MAGNET ASSY
02203-001, MAGNET

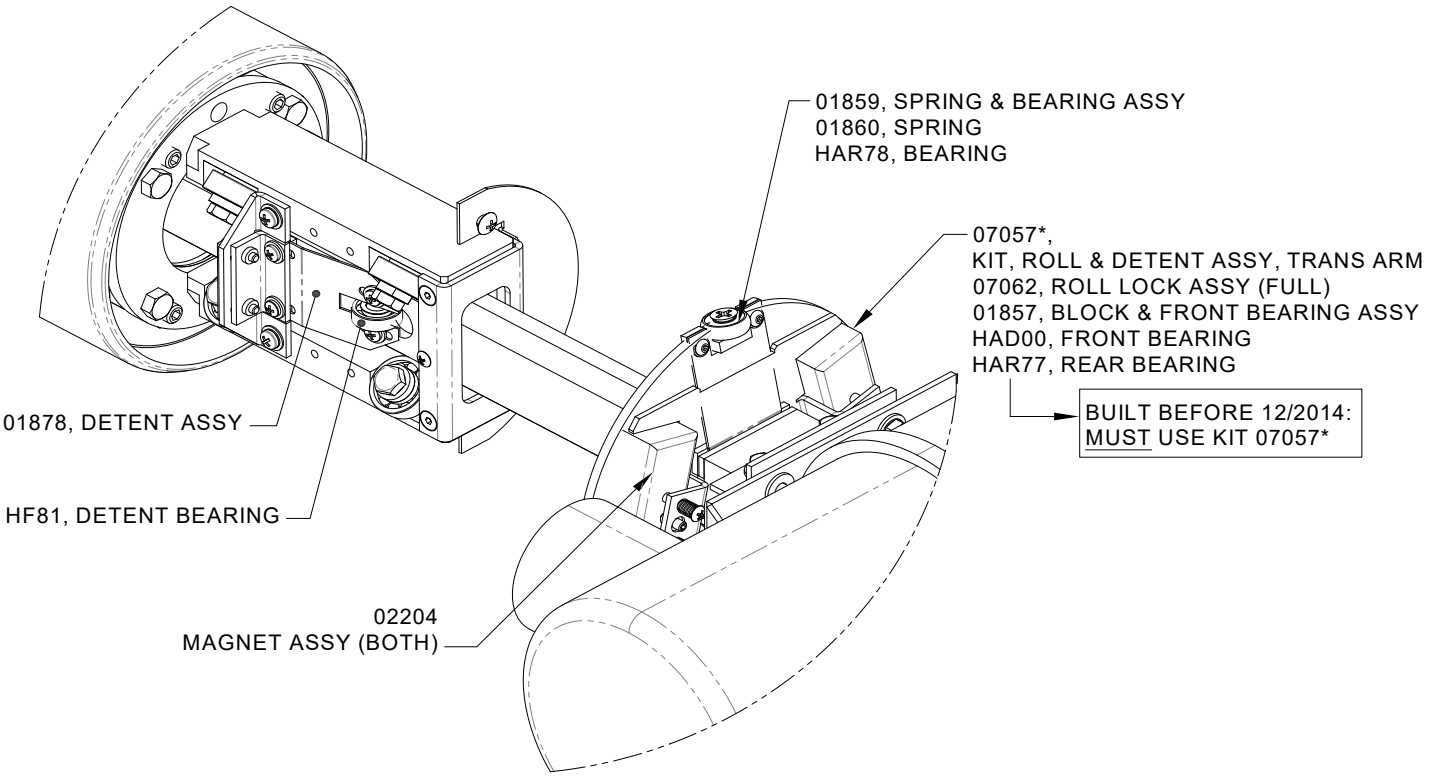
01859, SPRING & BEARING ASSY
01860, SPRING
HAR78, BEARING
07057*,
KIT, ROLL & DETENT ASSY, TRANS ARM
07062, ROLL LOCK ASSY (FULL)
01857, BLOCK & FRONT BEARING ASSY
HAD00, FRONT BEARING
HAR77, REAR BEARING
BUILT BEFORE 12/2014:
MUST USE KIT 07057*
01878, DETENT ASSY
HF81, DETENT BEARING
02204
MAGNET ASSY (BOTH)

08432 Rev. F

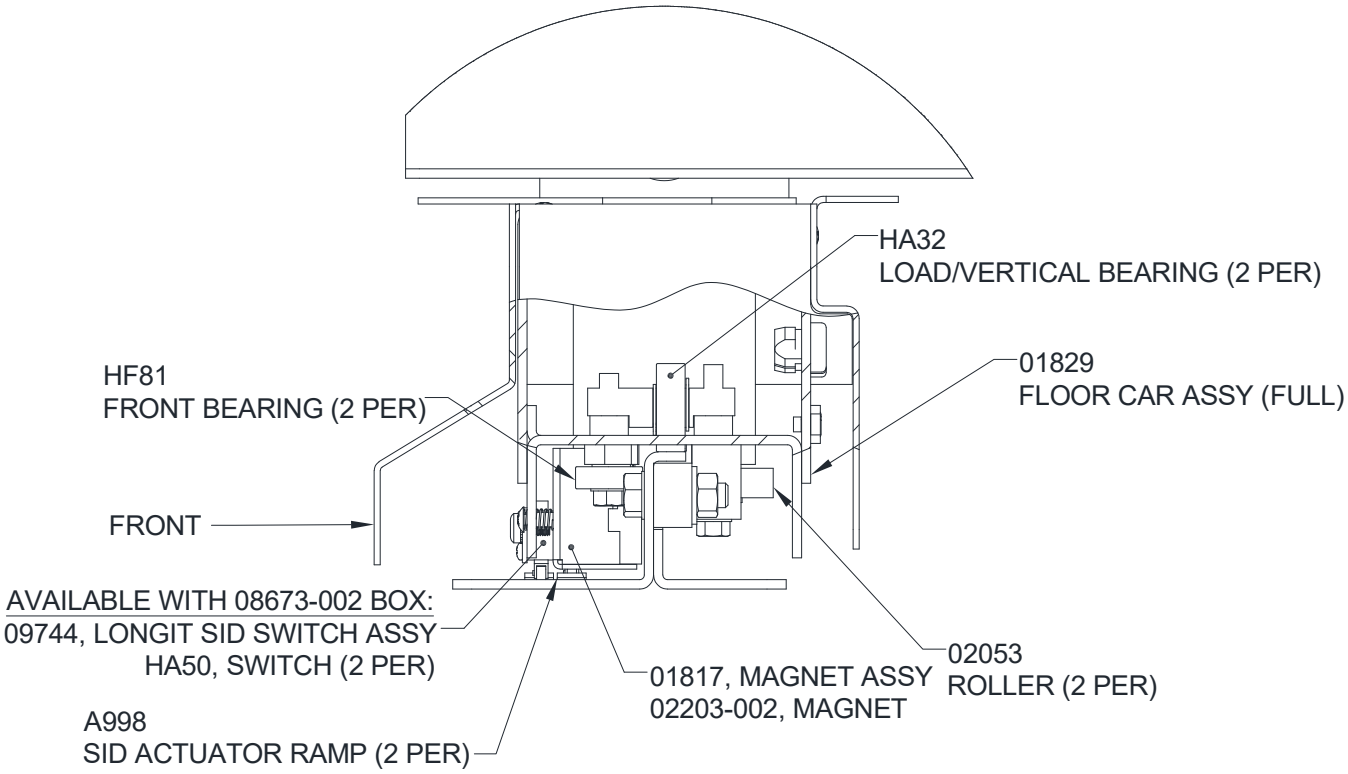
HA32
LOAD/VERTICAL BEARING (2 PER)
01829
FLOOR CAR ASSY (FULL)
HF81
FRONT BEARING (2 PER)
FRONT
AVAILABLE WITH 08673-002 BOX:
09744, LONGIT SID SWITCH ASSY
HA50, SWITCH (2 PER)
A998
SID ACTUATOR RAMP (2 PER)
01817, MAGNET ASSY
02203-002, MAGNET
02053
ROLLER (2 PER)