Technical Publication
RP-1319R1
Summit P/N 09743-008 Rev. B

Renewal Parts

Mobile X-Ray Units

REVISION HISTORY

REVISION	DATE	REASON FOR CHANGE
0	SEP 29, 2022	First edition
1	JAN 18, 2024	Components update

This Document is the english original version, edited and supplied by the manufacturer.

The Revision state of this Document is indicated in the code number shown at the bottom of this page.

ADVISORY SYMBOLS

The following advisory symbols will be used throughout this manual. Their application and meaning are described below.

DANGER !

DANGERS ADVISE OF CONDITIONS OR SITUATIONS THAT IF NOT HEEDED OR AVOIDED WILL CAUSE SERIOUS PERSONAL INJURY OR DEATH.

WARNING

ADVISE OF CONDITIONS OR SITUATIONS THAT IF NOT HEEDED OR AVOIDED COULD CAUSE SERIOUS PERSONAL INJURY, OR CATASTROPHIC DAMAGE OF EQUIPMENT OR DATA.

CAUTION

Advise of conditions or situations that if not heeded or avoided could cause personal injury or damage to equipment or data.

Note ☞

Alert readers to pertinent facts and conditions. Notes represent information that is important to know but which do not necessarily relate to possible injury or damage to equipment.

SECTION 1 RENEWAL PARTS

EXTERNAL ASSEMBLY

A TUBE-COLLIMATOR ASSEMBLY

B TELESCOPIC ARM

C TELESCOPIC COLUMN

D COVERS

E HANDLE KIT

F FRONT WHEEL

G BACK WHEEL

H SYSTEM CONTROLS

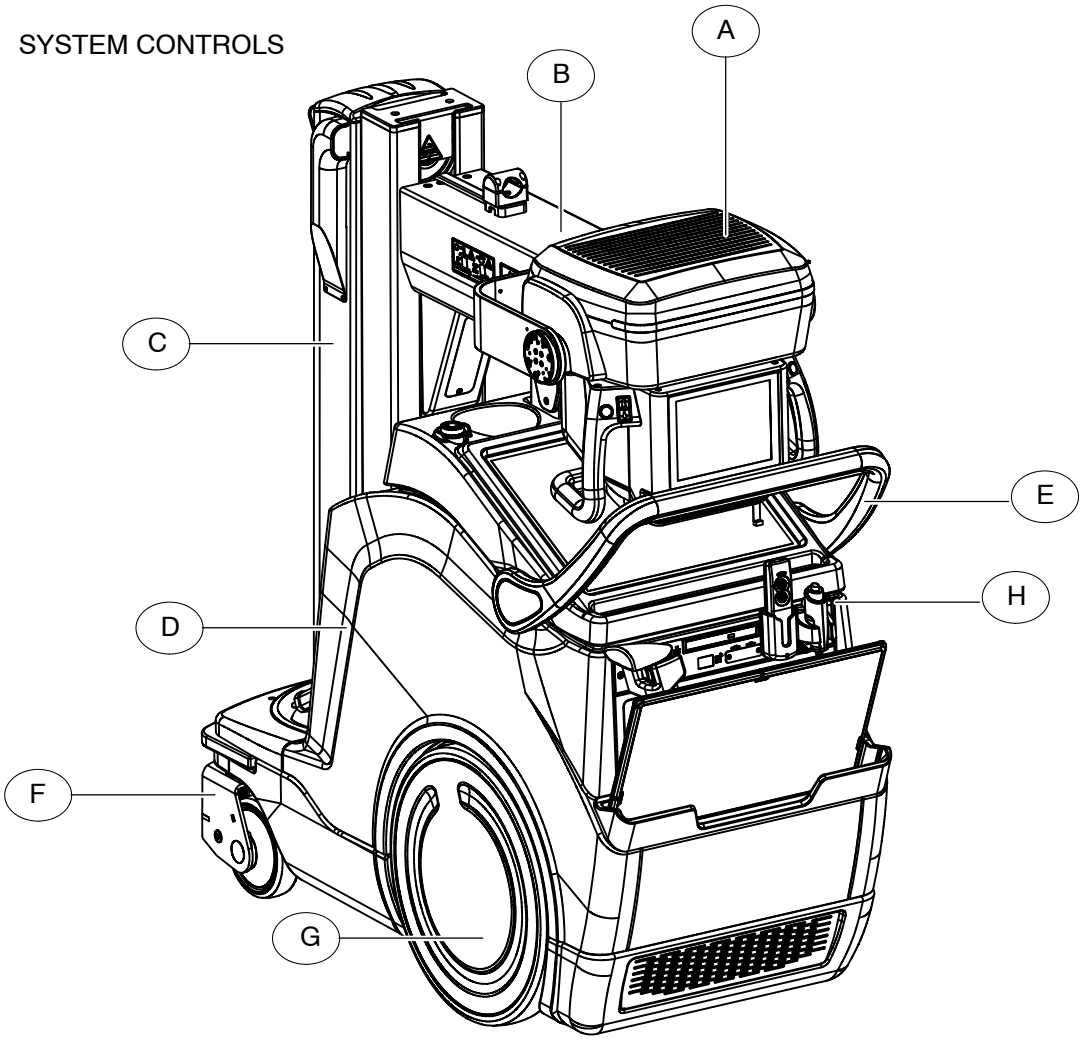

ITEM	DESCRIPTION	QTY	REFERENCE	REMARKS
A0	**TUBE-COLLIMATOR ASSEMBLY (MONOBLOCK)**			
A1	Upper Cover	1	SAT-P00201-003	
A2	Lower Front Cover	1	SAT-P00202-003-080	logo not included
A3	Lower Back Cover	1	SAT-P00203-003	
A4	Lower Side Covers	1	A526502-080	
A5	Front Left LED	1	SAT-A40047-01	Optional
A6	Front Right LED	1	SAT-A40047-02	Optional
A7	Back LED	1	SAT-A40048-01	Optional
A8	LED Stripe Cover	1	A526501-01	
A9	HV Tank	1	SAT-A12257-XX	XX=01 tube XRR3331 XX=02 tube E7886
A10	Monoblock Electric Right Support	1	A526503-03	for Unit with 4 Sections Arm
A11	Monoblock Electric Left Support	1	A526503-04	for Unit with 4 Sections Arm
A12	Touch Screen	1	SAT-CC00531	
A13	Right Handgrip Kit	1	A526505-080	Includes a wiring harness for compatibility with GPIO PCB A40004-03.
A14	Left Handgrip Kit	1	A526506-080	
A15	Button Switch	2	A526525-01	
A16	Button Handle	2	SAT-10731-03	
A17A	Collimator Cover Assembly with TPC	1	A526504-01	
A17B	Collimator Cover Assembly without TPC	1	A526504-02	
A18	PCB GPIO Head	1	SAT-A40004-04	Includes wiring harnesses to make it compatible with the handgrips installed with GPIO PCB A40004-03.
A19	PBA Monoblock Buffer	1	SAT-A40003-01	
A20	Head Rotation Kit	1	A526524-01	Includes Item A20.1
A20.1	Brake Cover	1	SAT-30324-01	

ITEM	DESCRIPTION	QTY	REFERENCE	REMARKS
A21	Collimator for Unit with 3 Sections Arm	1	6693-55L	R108/170L/FDHHS
	Collimator for Unit with 4 Sections Arm	1	6693-55C	R108/170C/FDHHS
A21.1	RS035 Potentiometer	2	A525416-01	
A21.2	RS1492 Mounting Flange	1	A525417-01	
A21.3	RS2700 Step Motor	1	A525418-01	
A21.4	RS2702 Retractable Tape	1	A525419-01	
A21.5	RS2586 LED	1	A525420-01	
A21.6	RS665 Photocell	1	A525421-01	
A21A.7	ROS2703 Front Panel	1	A525422-01	for Unit with 4 Sections Arm
A21B.7	RS2710 Front Panel R108E/G/L	1	A525425-01	for Unit with 3 Sections Arm
A21.8	Lasser RS2589	2	A525184-01	
A21.9	RS2539 LED Board	1	A525182-01	
A21.10	RS1106 FAN LED	1	A525337-01	
A21A.11	Knob	1	SAT-23388-06	for Unit with 4 Sections Arm
A21B.11		1	A525023-003	for Unit with 3 Sections Arm
A22	Monoblock Turning Right Kit	1	A526533-01	
A23	Monoblock Turning Left Kit	1	A526534-01	
A24	Monoblock Support	1	SAT-P00118	for Unit with 3 Sections Arm
A25	Inclinometer	1	SAT-A11915-01	
A26	Anticollision Sensor Assembly	1	SAT-A40018-01	Optional
A27	DAP Ion Chamber	1	6695-54	Optional

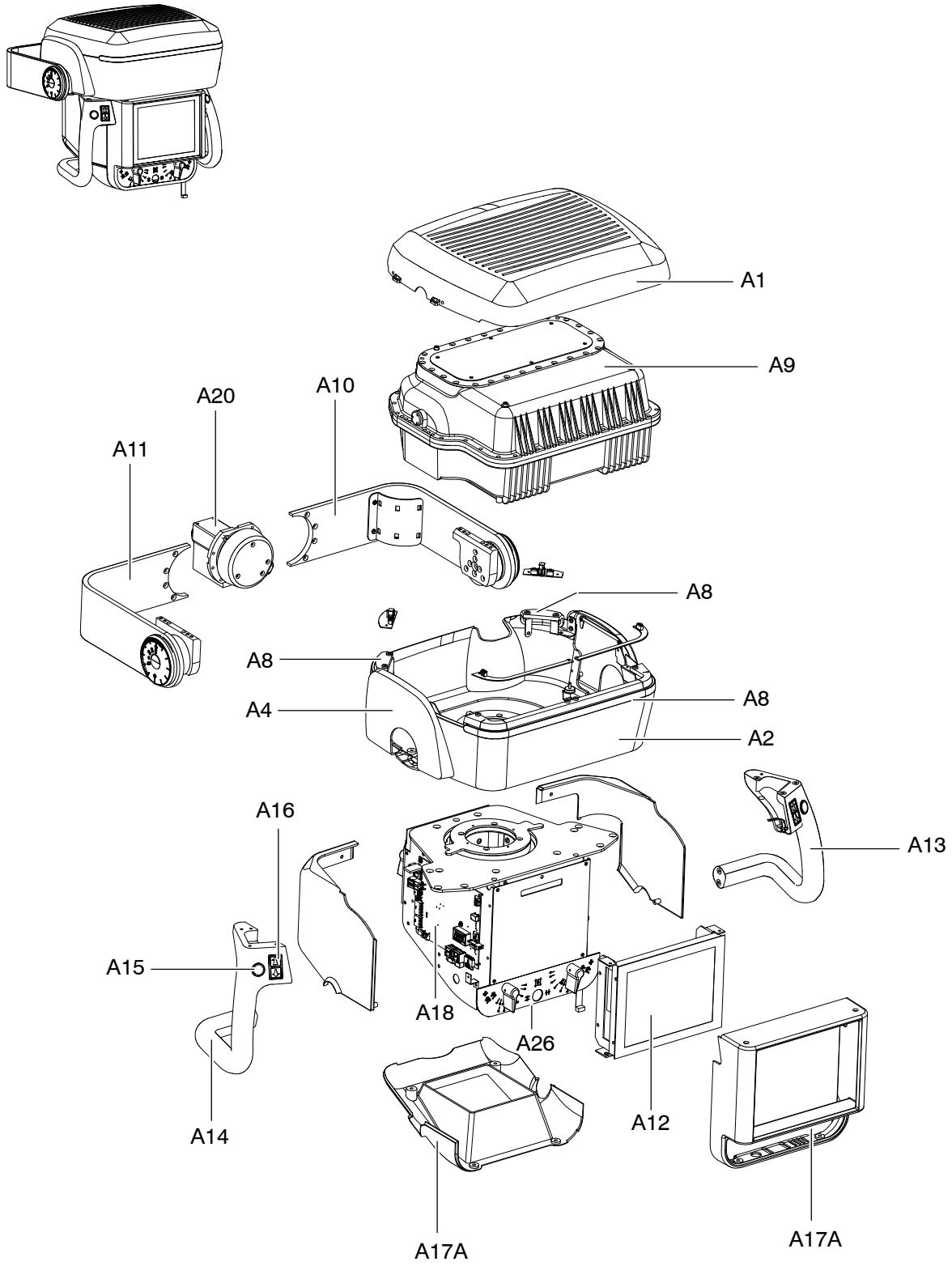
A1
A9
A20
A10
A11
A8
A8
A8
A4
A2
A16
A13
A15
A18
A26
A14
A12
A17A
A17A

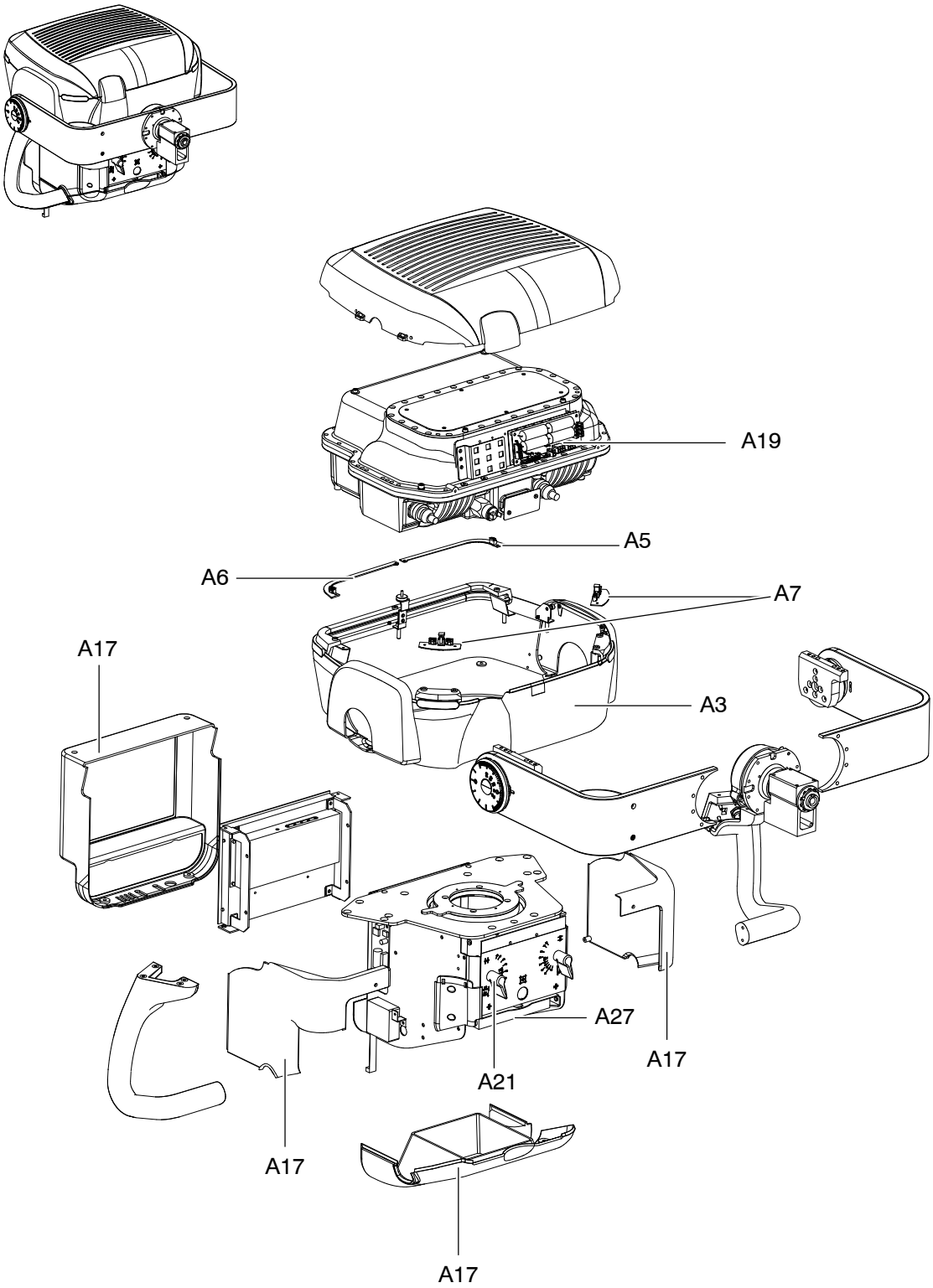
A19
A5
A6
A7
A17
A3
A27
A17
A21
A17
A17

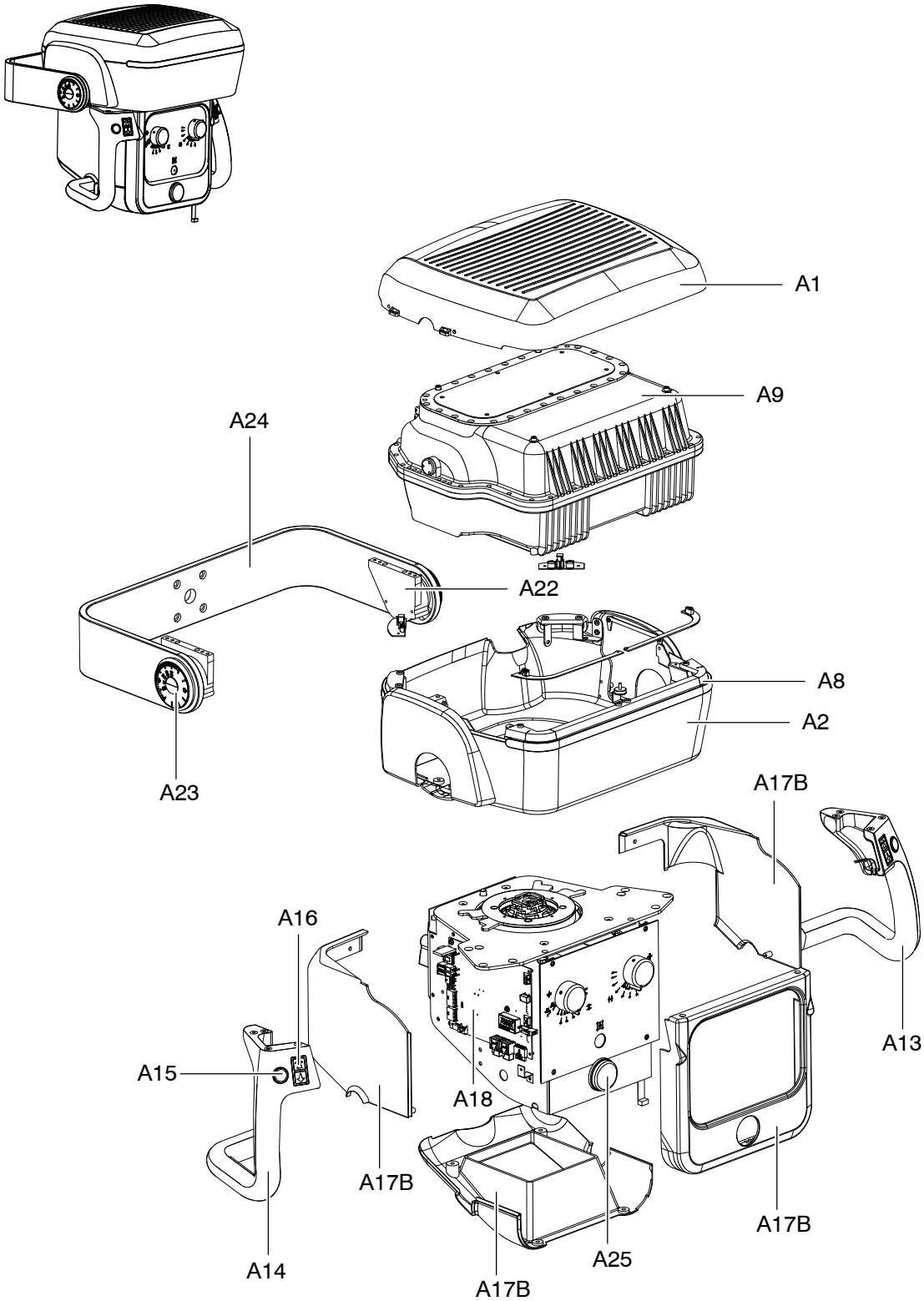
A1
A9
A24
A22
A8
A2
A23
A17B
A16
A13
A15
A18
A17B
A17B
A14
A25
A17B

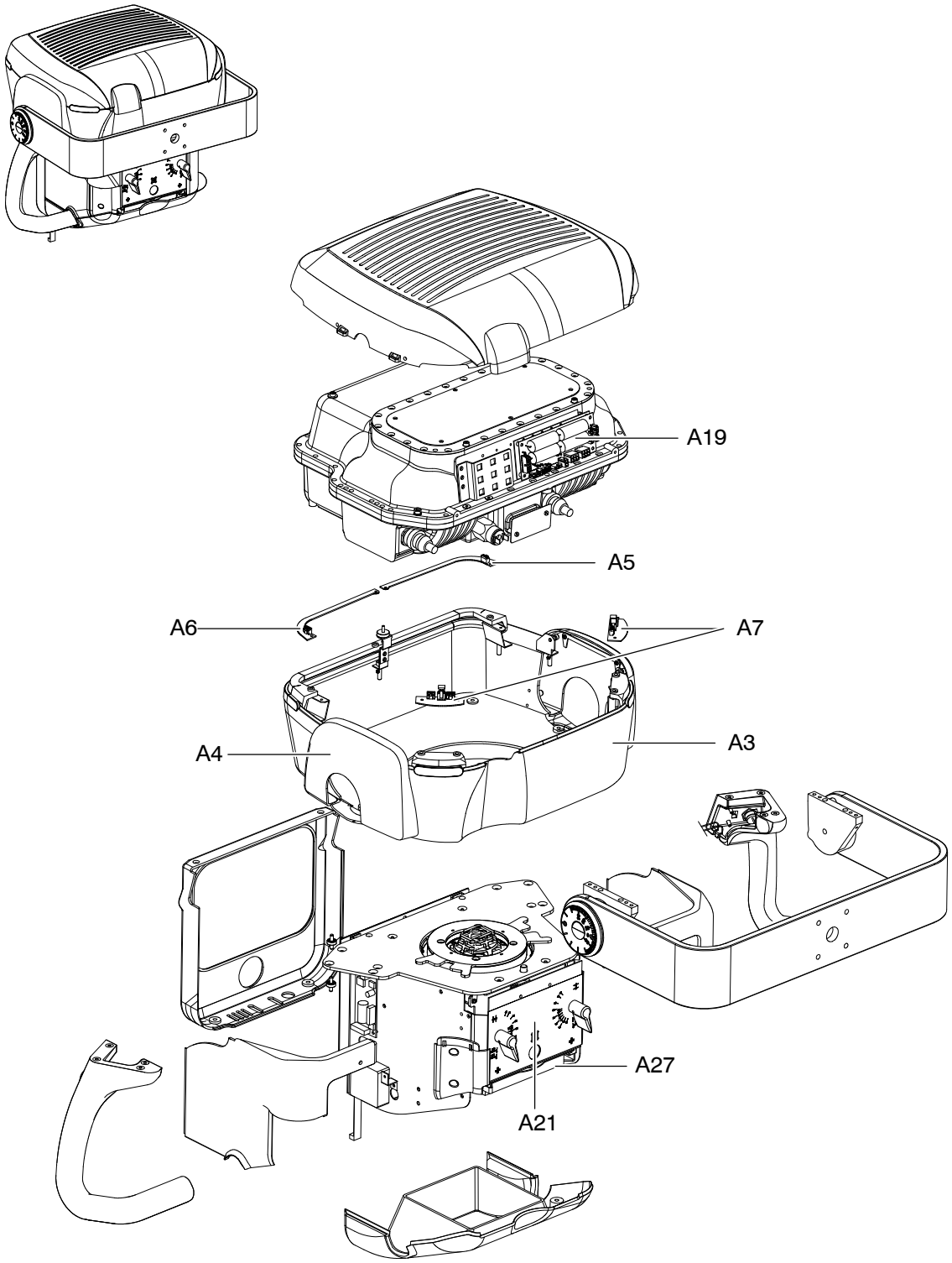
A19
A5
A6
A7
A4
A3
A27
A21

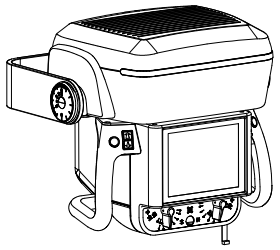

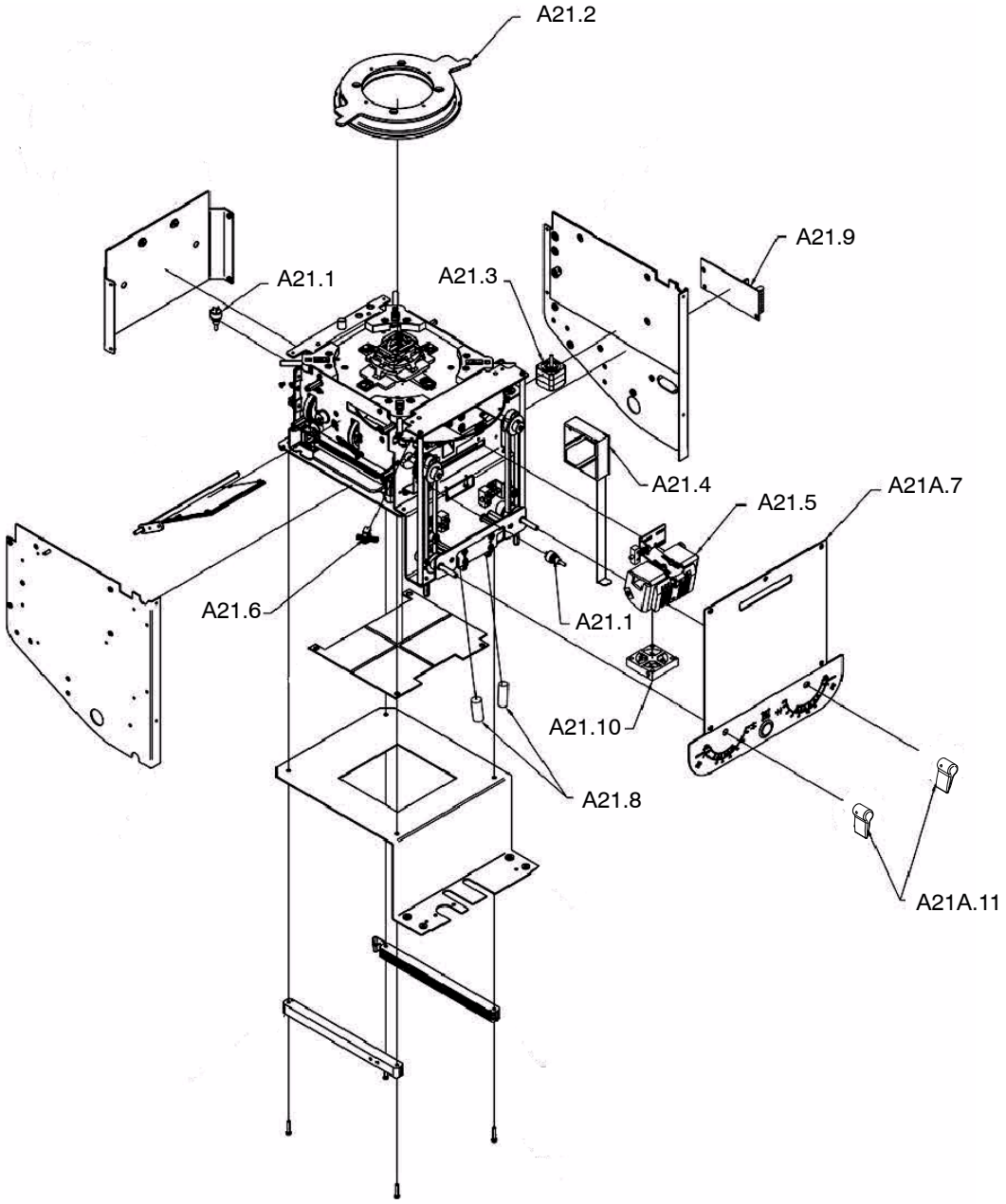
A21.2
A21.9
A21.1
A21.3
A21.4
A21.5
A21A.7
A21.6
A21.1
A21.10
A21.8
A21A.11

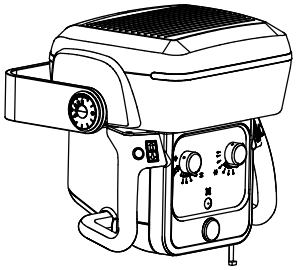

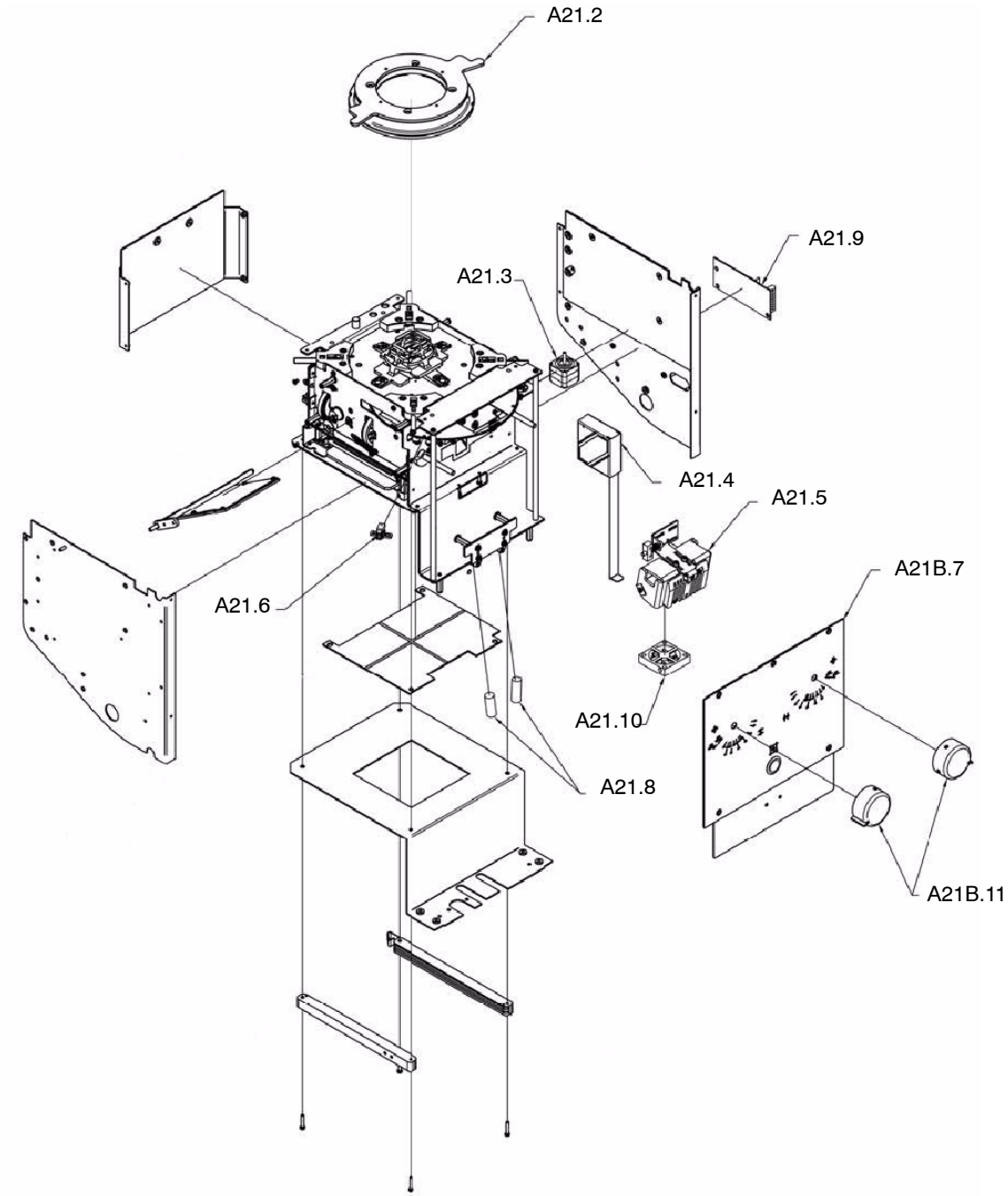
A21.2
A21.9
A21.3
A21.4
A21.5
A21B.7
A21.6
A21.10
A21.8
A21B.11

A1

A2

A3

A4

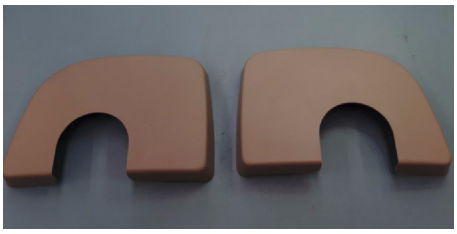

A5

A6

A7

A8

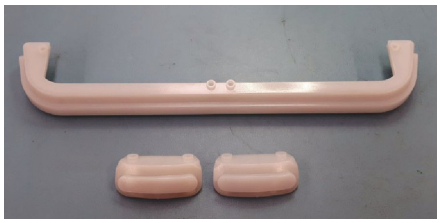

A9

A10

A11

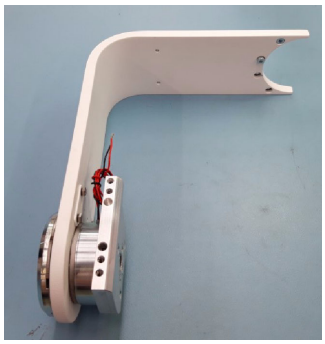

A12

A13

A14

A15

A16

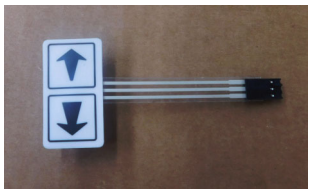

A17A

A17B

A18

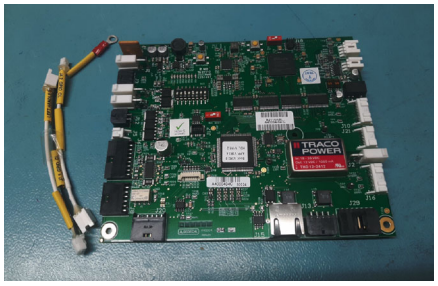

A19

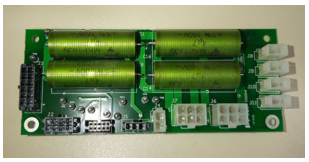

A21A.11

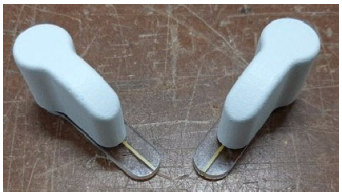

A20

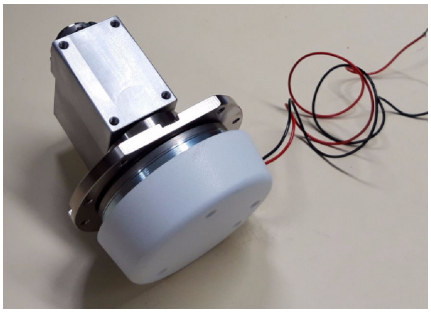

A20.1

A21B.11

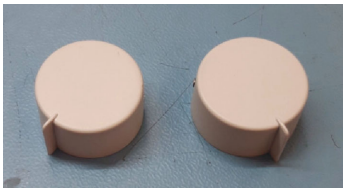

A22

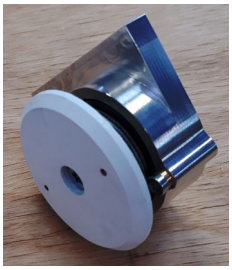

A23

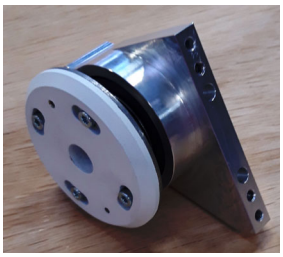

A24

A25

A26

ITEM	DESCRIPTION	QTY	REFERENCE	REMARKS
B1.0	**TELESCOPIC ARM (4 Sections Arm)**			
B1.1	Telescopic Arm (4 sections)	1	SAT-A12210-02	Includes Item B1.2 and B1.3
B1.2	Press-Cable Kit Mobile	1	A522127-01	
B1.3	Cable Cover Arm Mobile	1	SAT-P01148	
B1.4	Parking Lock	1	A520438-04	Includes B1.5, B1.6
B1.5	Lock Shaft	1	SAT-P00859	
B1.6	Parking Rubber Stop	1	SAT-53830017	Includes 10 units

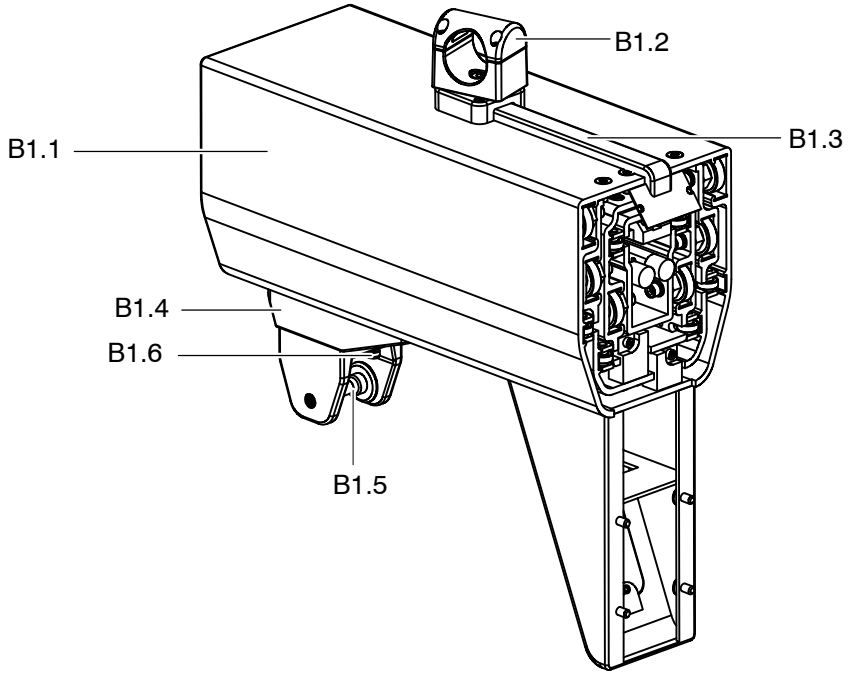

B1.2

B1.3

B1.4

B1.5

B1.6

ITEM	DESCRIPTION	QTY	REFERENCE	REMARKS
B2.0	**TELESCOPIC ARM (3 Sections Arm)**			
B2.1	Eccentric Bearing Kit	8	SAT-30169-02	
B2.2	Lateral Bearing Kit	8	A520103-01	
B2.3	Stop Kit	2	A520107-01	
B2.4	Brake Kit	1	A522126-01	
B2.5	Rubber Stop	1	SAT-15430-01	Includes 10 stops
B2.6	Pulley diameter 35, Kit	1	A520108-01	
B2.7	Pulley diameter 41, Kit	1	A520109-01	
B2.8	Tightening Device Kit	1	A520110-02	
B2.9	Head Rotation Kit	1	A520201-02	
B2.10	Parking Lock 3T	1	A520438-05	Includes B2.12, B2.13
B2.11	Lock Shaft	1	SAT-P00859	
B2.12	Parking Rubber Stop	1	SAT-53830017	Includes 10 units
B2.13	Press-Cable Kit Mobile	1	A522127-01	
B2.14	Cable Cover Arm Mobile	1	SAT-P01148	

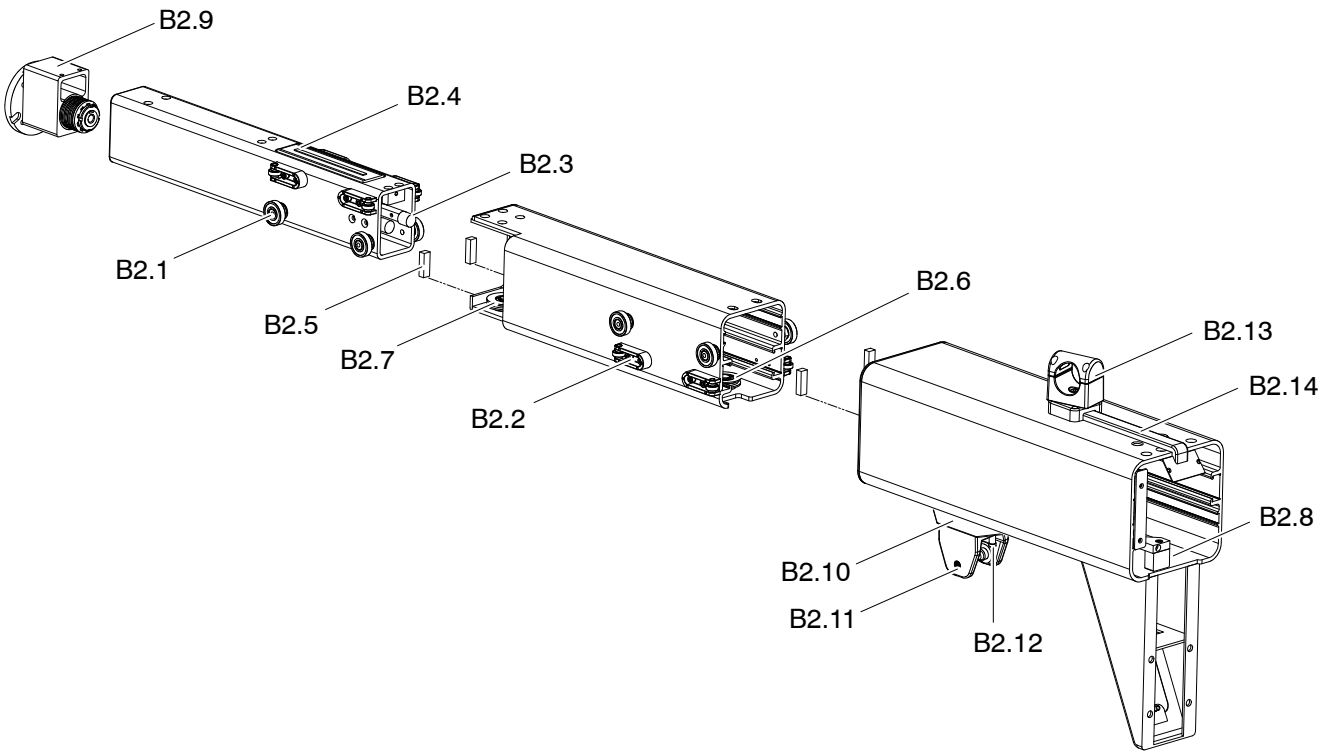

B2.1

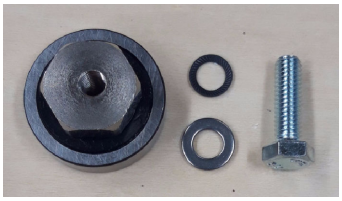

B2.2

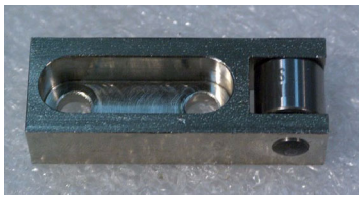

B2.3

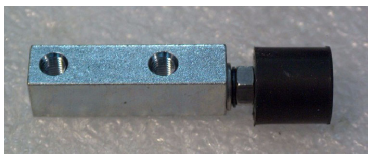

B2.4

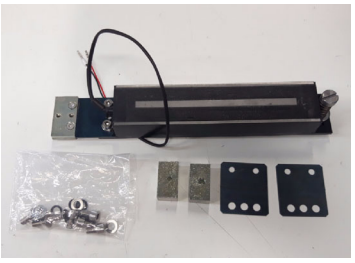

B2.5

B2.6

B2.7

B2.8

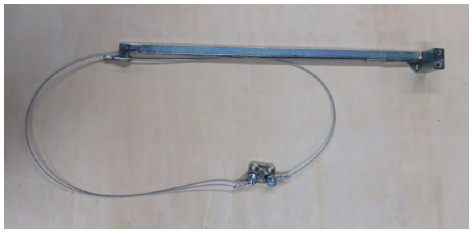

B2.9

B2.10

B2.11

B2.12

B2.13

B2.14

ITEM	DESCRIPTION	QTY	MFT. REFERENCE	REMARKS
C0	**TELESCOPIC COLUMN**			
C1	Main Pulley Kit	1	SAT-A12202-03	To replace this part, it will be necessary to use the Spring Tensor Tool in the spare part SAT-AS00794 for Unit with 3 Sections Arm
	Main Pulley Kit	1	SAT-AS00963	To replace this part, it will be necessary to use the Spring Tensor Tool in the spare part SAT-AS00794 for Unit with 4 Sections Arm
C2	Long Cable Output Cover	1	SAT-30227-03	
C3	Rubber Stop	1	SAT-15430-01	Includes 10 stops
C4	Telescopic Column Bearing Kit	1	A522125-01	To replace this part, it will be necessary to use the Spring Tensor Tool in the spare part SAT-AS00794
C5	Lower Pulley	1	A522128-01	
C6	Column Spring Kit	1	SAT-A12231-01	
C7	Upper Pulley	1	A526556-01	
C8	Steel Cable Telescopic Column	1	SAT-P07582	
C9A	Telescopic Column Carriage 3T Kit	1	SAT-A12205-06	Includes Item C2
C9B	Telescopic Column Carriage 4T Kit	1	SAT-A12205-05	Includes Item C2
C10	Conical Bearing Kit	1	A520086-01	
C11	Roller Bearing Kit	1	A520087-01	
C12	Clutch	1	SAT-A12222-05	Includes Item C12.1
C12.1	Chain	1	SAT-P00963	Included Lithium Grease tube
C13	Parachute Kit	1	A521139-02	To replace this part, it will be necessary to use the Spring Tensor Tool in the spare part SAT-AS00794
C14	Upper Cover	1	SAT-30236-01-080	

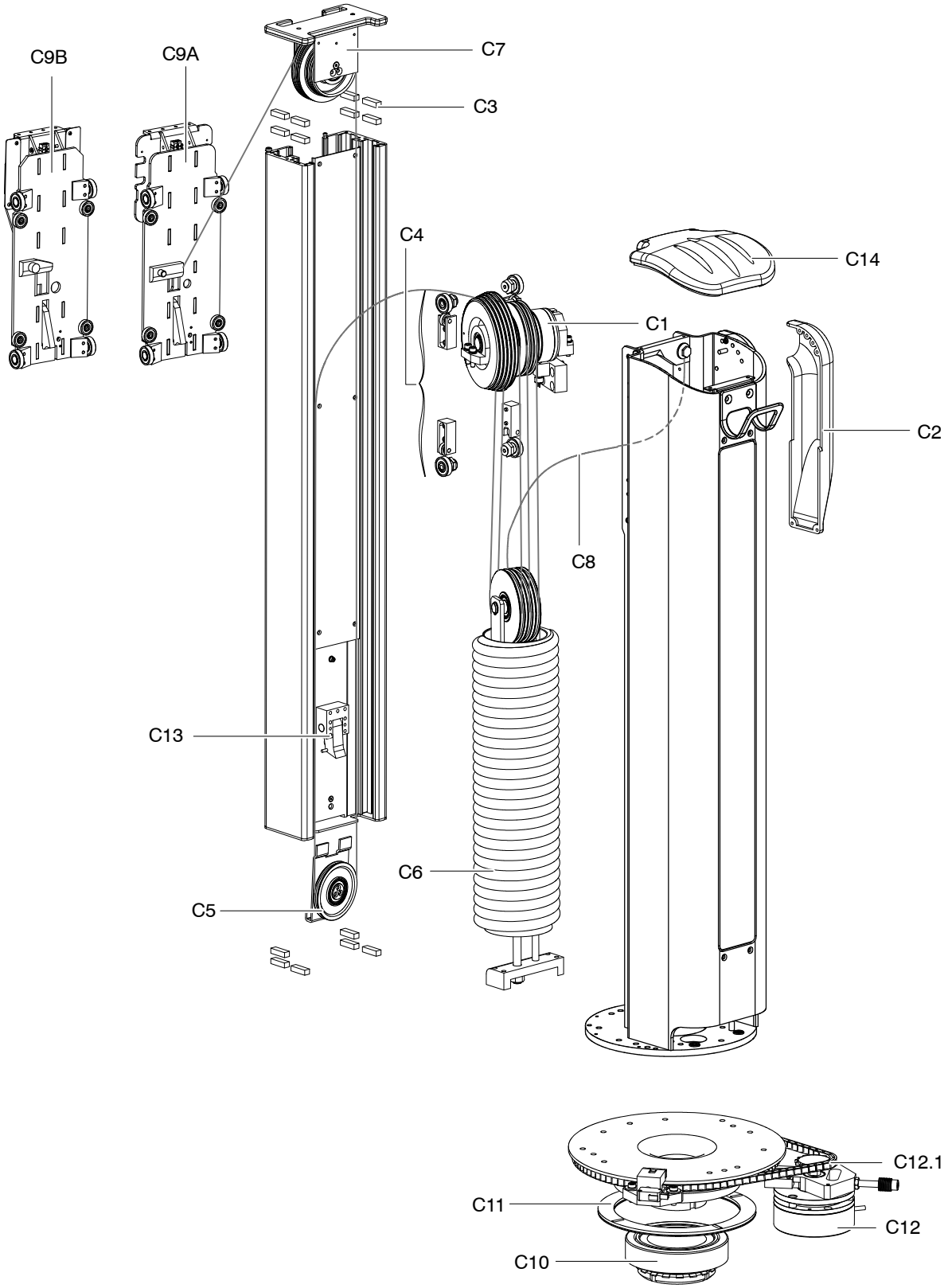
C9B
C9A
C7
C3
C4
C14
C1
C2
C8
C13
C6
C5
C12.1
C11
C12
C10

C1

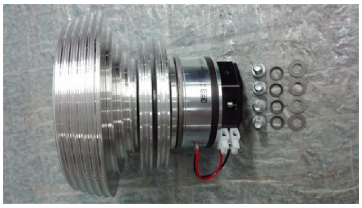

C2

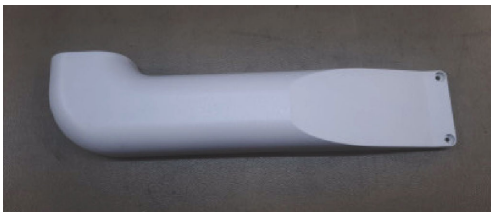

C3

C4

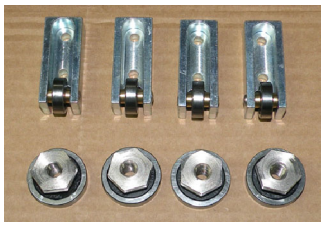

C5

C6

C7

C8

C9A

C9B

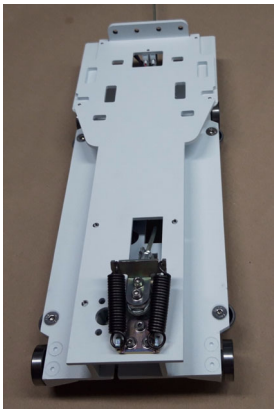

C10

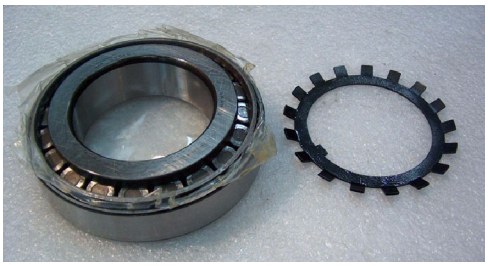

C11

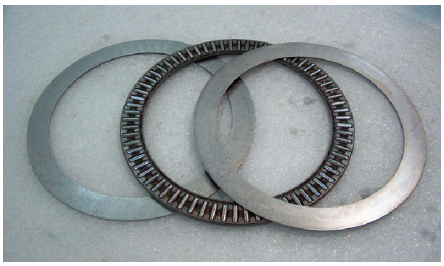

C12

C12.1

C13

C14

ITEM	DESCRIPTION	QTY	REFERENCE	REMARKS
D0	**COVERS**			
D1	Upper Cover Kit	1	A526509-080	
D2	Right Lateral Cover Kit	1	A526510-01	logo not included
D3	Left Lateral Cover Kit	1	A526562-01	logo not included
D4	Front Cover Kit	1	A526563-080	
D5	Cover Base Column	1	A526519-01	
D6	Back Bumper	1	A526566-080	
D7	Detector Box	1	A526567-080	
D8	Back Box Kit	1	A526536-080	
D9	Front Box Kit without Charger	1	A526521-01	
	Front Box Kit with Charger one Detector	1	A526521-02	
D10	Bumper Cover Kit	1	A526515-080	
D11	Bumper	1	A526516-01	
D12	Front Bumper	1	A526517-080	
D13	Left Bumper	1	A526514-080	
D14	Right Bumper	1	A526518-080	
D15	Fan	2	A520093-02	
E0	**HANDLE**			
E1	Handle Kit	1	SAT-AS00958-080	Includes Item E1.1
E1.1	Cover Handle Kit	1	A526507-080	
E2	PCB Handle Capacitive Switch	1	SAT-A40024-04	
E3	Handle Gauge	2	SAT-17492-03	

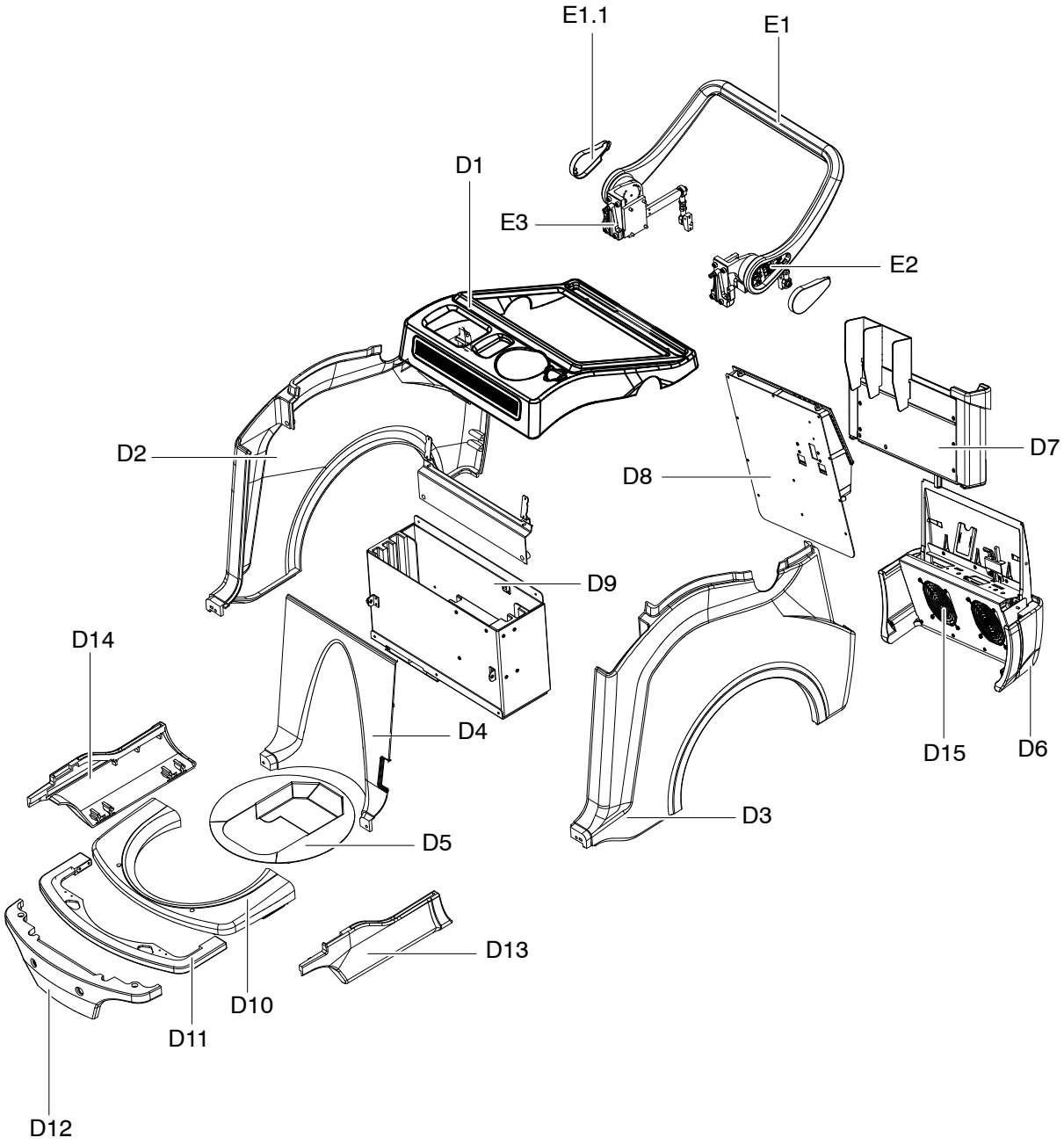
E1.1
E1
D1
E3
E2
D2
D7
D8
D9
D14
D4
D15
D6
D3
D5
D13
D10
D11
D12

D1

D2

D3

D4

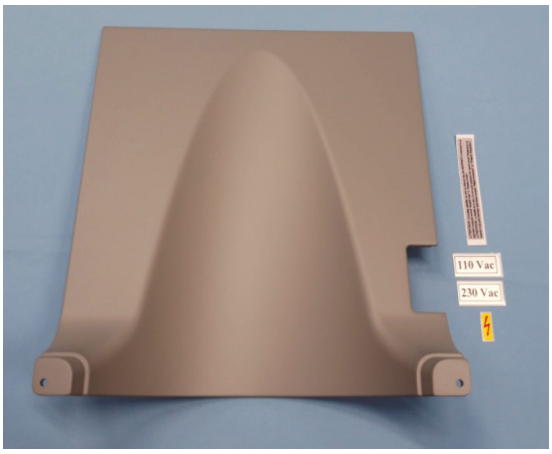

D5

D6

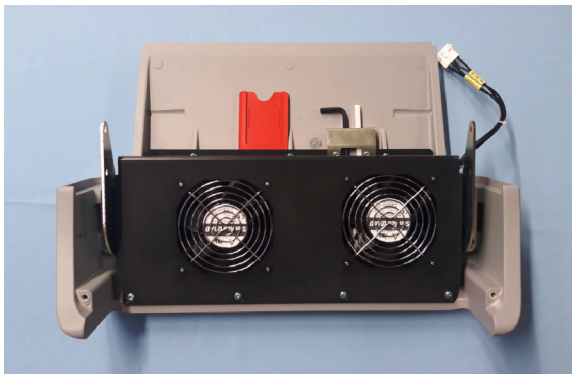

D7

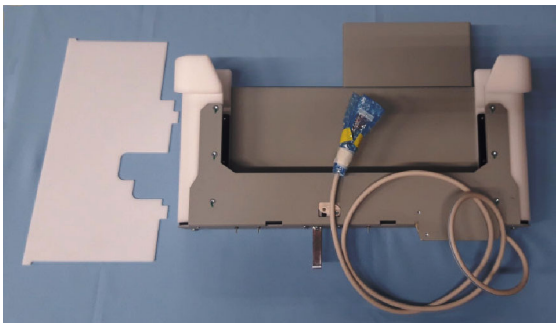

D8

D9

D9

D10

D11

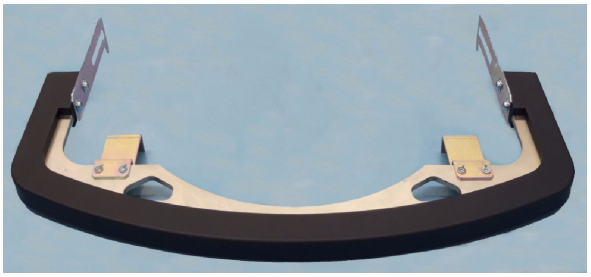

D12

D13

D14

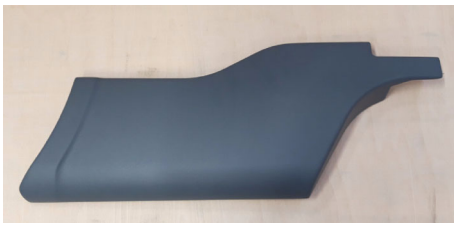

D15

E1

E1.1

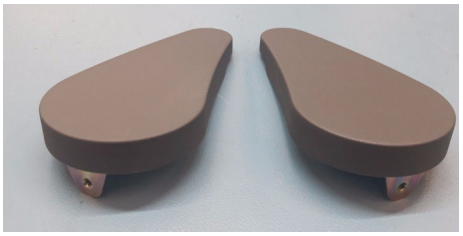

E2

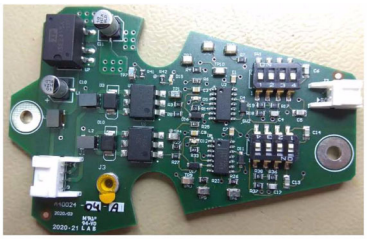

E3

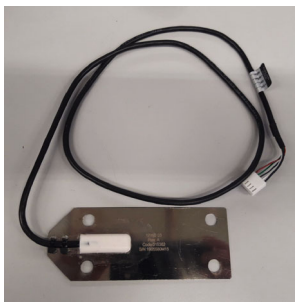

ITEM	DESCRIPTION	QTY	REFERENCE	REMARKS
F0	**FRONT WHEEL ASSEMBLY**			
F1	Front Wheel Kit	2	SAT-AS00954	
F2	Front Wheel Bearing Kit	2	A520113-01	

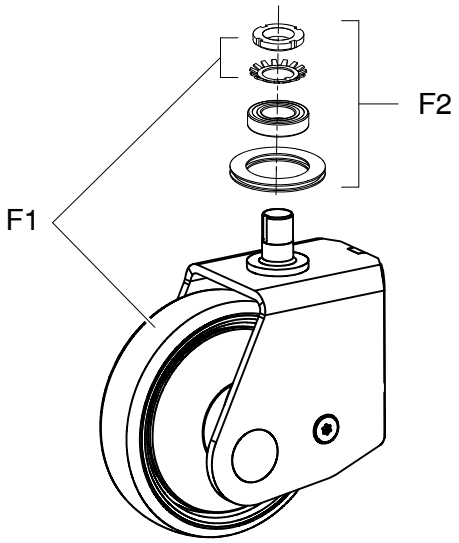

F1

F2

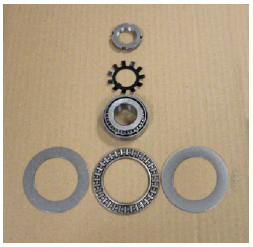

ITEM	DESCRIPTION	QTY	REFERENCE	REMARKS
G0	**BACK WHEEL ASSEMBLY**			
G1	Back Wheel	2	SAT-A16083-01	
G2	Motor Reducer	2	SAT-A12260-01	
G3	Transmission Group	2	A526522-01	Includes Item G3.1
G3.1	Chain	2	SAT-37816-01	
G4	Hubcap	2	SAT-A16082-01	

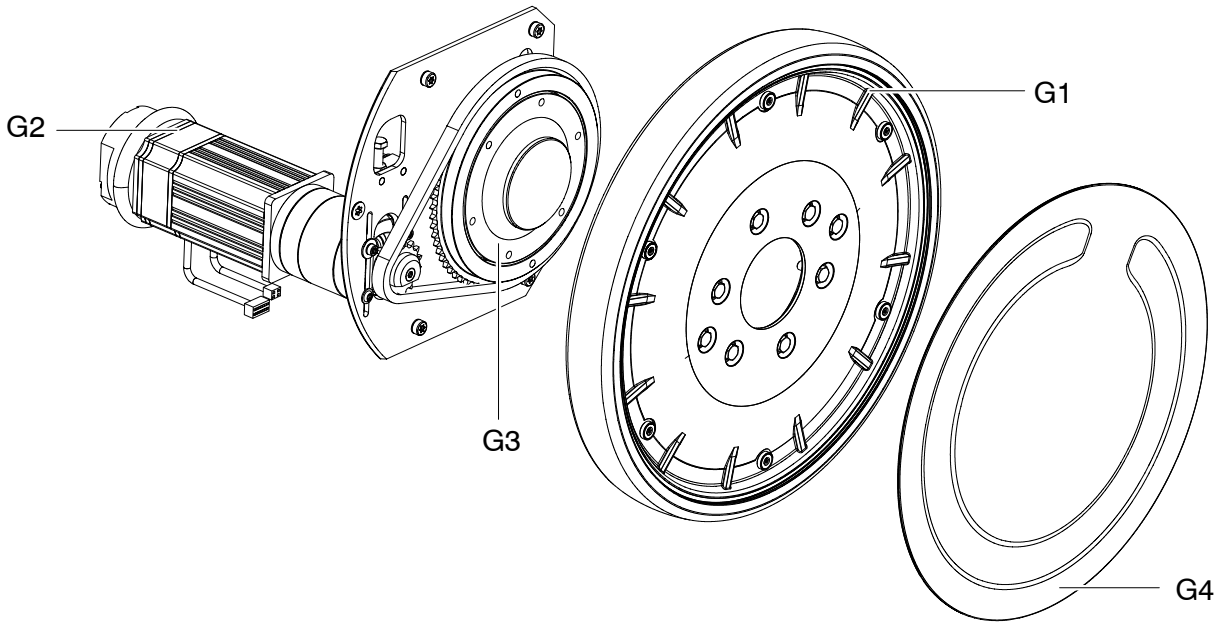

G1

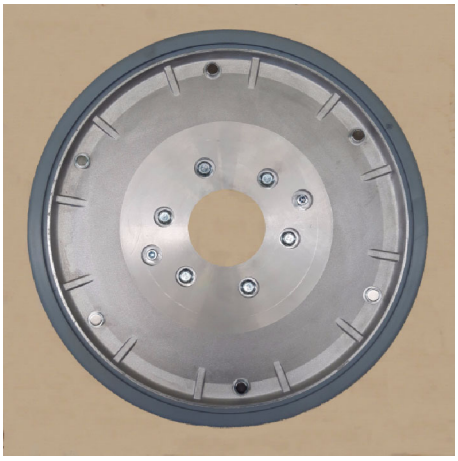

G2

G3

G3.1

G4

ITEM	DESCRIPTION	QTY	REFERENCE	REMARKS
H0	**SYSTEM CONTROLS**			
H1	Monitor 19” (for Unit with 4 Sections Arm)	1	SAT-55001411	
	Monitor 19” (for Unit with 3 Sections Arm)	1	SAT-CC00803	
H2A	RFID	1	SAT-AS00149	
H2B	ON/OFF Button and Key Pad	1	SAT-AS00150	
H2C	ON/OFF Button	1	SAT-AS00454	
H3	RFID Card	1	SAT-AS00627	Included 4 units
H4	Emergency Switch	1	SAT-A7994-01	
H5	Handswitch	1	SAT-A6805-17	
H6	Handswitch Support	1	SAT-11996-01-080	
H7	Parking	1	A526527-01	
H8	Remote Control	1	SAT-AS00230	Includes H9
H9	Charger Support	1	SAT-AS00232	
H10	Recorder CD-DVD	1	SAT-55001366	
H11	Infrared Sensor	1	SAT-55001176	
H12	USB Cable 3.0	1	SAT-CC00572	
H13	Barcode Scanner Kit	1	SAT-AS00474	
H14	Brake Pushbutton Cable	1	A21299-01	Optional
H15	RFID Service Card Holder	1	SAT-P04713	
H16	RJ45 Female CAT5e Compact	2	SAT-CC00573	

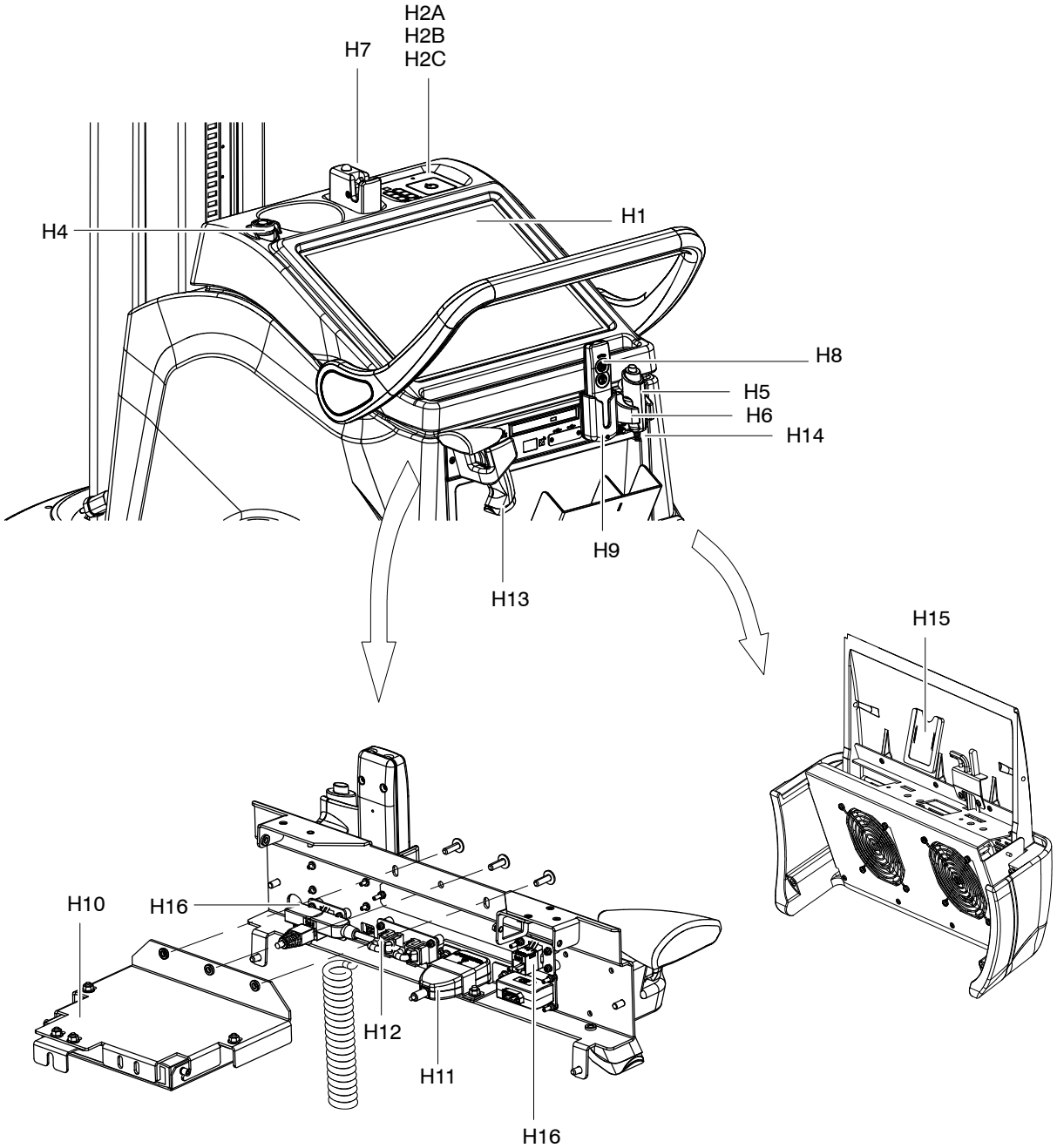
H2A
H2B
H2C
H7
H4
H1
H8
H5
H6
H14
H9
H13
H15
H10
H16
H12
H11
H16

H1

H2A

H2B

H2C

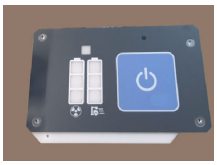

H4

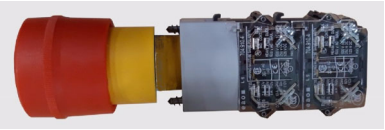

H5

H6

H7

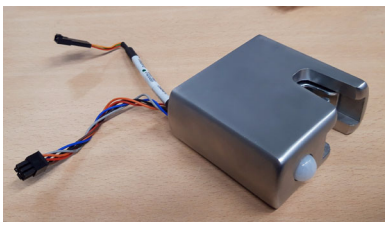

H8

H9

H10

H11

H12

H13

H14

H15

H16

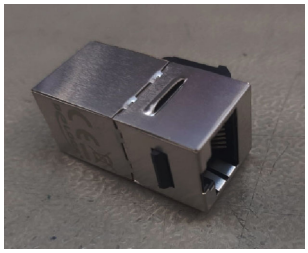

INTERNAL ASSEMBLY

I GENERAL PARTS AND PCBS

J FRONT TRAY

K BACK TRAY AND POWER SUPPLY MODULE

L INVERTER

M BATTERY TRAY

N MISCELLANEOUS

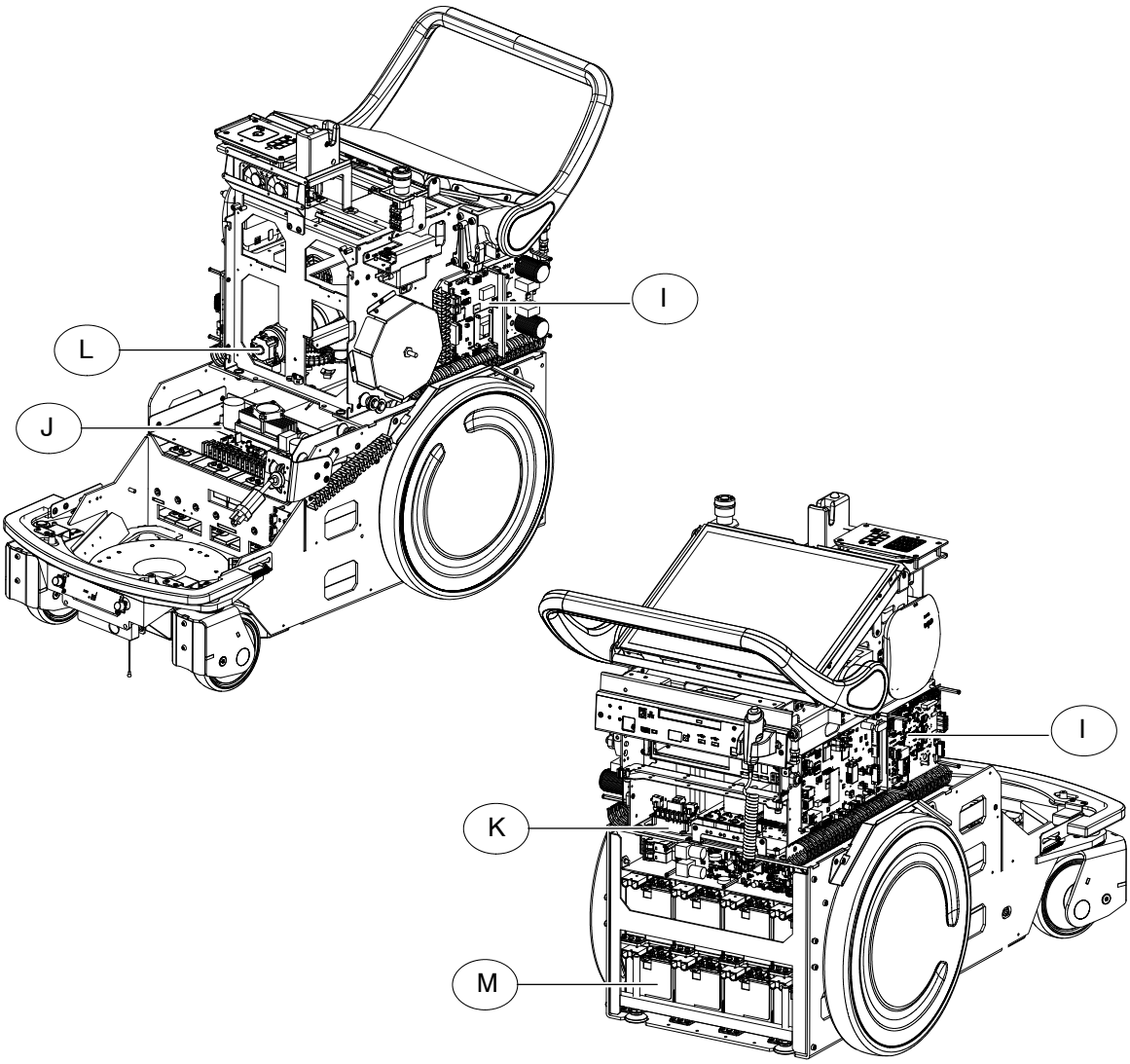

ITEM	DESCRIPTION	QTY	REFERENCE	REMARKS
I	**GENERAL PARTS AND PCBS**			
I1	PC	1	A526526-01-ATS	Includes Item I1.1, I1.2
	PC with Backup Cable	1	A526526-02-ATS	Includes Item I1.1, I1.2
I1.1	KIT MINI-PCIe WIFI-ac	1	SAT-K00011-01	
I1.2	USB Key	1	SAT-CC01246	
I2	Access Point (Aruba)	1	SAT-CC00923	for Egypt
			SAT-CC00924	for Israel
			SAT-CC00925	for Japan
			SAT-CC00926	for ROW
			SAT-CC00927	for USA
I3	Varistor PCB	1	SAT-A40020-01	
I4	Filter	1	SAT-CC00369	
I5	Advanced Digital Motion Control	1	SAT-A3686-03	
I6	Advanced Control Board	1	SAT-A3678-03	
I7	UARC PCB	1	SAT-A3615-03	
I8	Interconnection Brakes PBA	1	SAT-A40032-01	
I9	Power Supply	1	SAT-A40017-03	
I10	Fan	1	A526528-01	
I11	Speaker	1	SAT-A15533-01	
I12	Arrestor Strap Kit	1	SAT-A9052-04	
I13	Discharger	1	SAT-19619-02	Includes 5 units
I14	Elevation Leg	2	SAT-CC00063	
I15	Anticolision Adapter	1	SAT-A3708-02	Optional
I16	Cable Reel	1	SAT-AS00265	EUROPE
			SAT-AS00313	CHINA
			SAT-AS00314	USA
			SAT-AS00316	GBR
			SAT-AS00317	SCH
			SAT-AS00318	ANZ
			SAT-AS00319	AFIN
			SAT-AS00320	BRZ
			SAT-AS00321	ISR
			SAT-AS00322	JAPAN
			SAT-AS01162	ARG
			SAT-AS01163	CHILE

ITEM	DESCRIPTION	QTY	REFERENCE	REMARKS
I17	Roller Exit Cover	1	SAT-AS01502	
I18	HUB 7 Port	1	SAT-CC00758	
I19	Bumper Microswitch	2	SAT-50605015	
I20	Fuse 10A	1	SAT-53801008	Includes 10 units
	Fuse 15A	1	SAT-53801028	Includes 10 units
	Fuse 12.5A	1	SAT-CC01020	Includes 10 units
I21	HDD - 1TB	1	SAT-K00136-01	Optional *(for replacement or upgrade to a PC with two hard disks)*
I22	Brake Release Interface PBA	1	SAT-A40152-01	
I23	PCB License SD	1	SAT-A40013-01	License is exclusive for each Mobile X-Ray Unit, so the corresponding Mobile X-Ray Unit serial number has to be indicated in the Spare Part Order. This component must not be stored as a stock item.

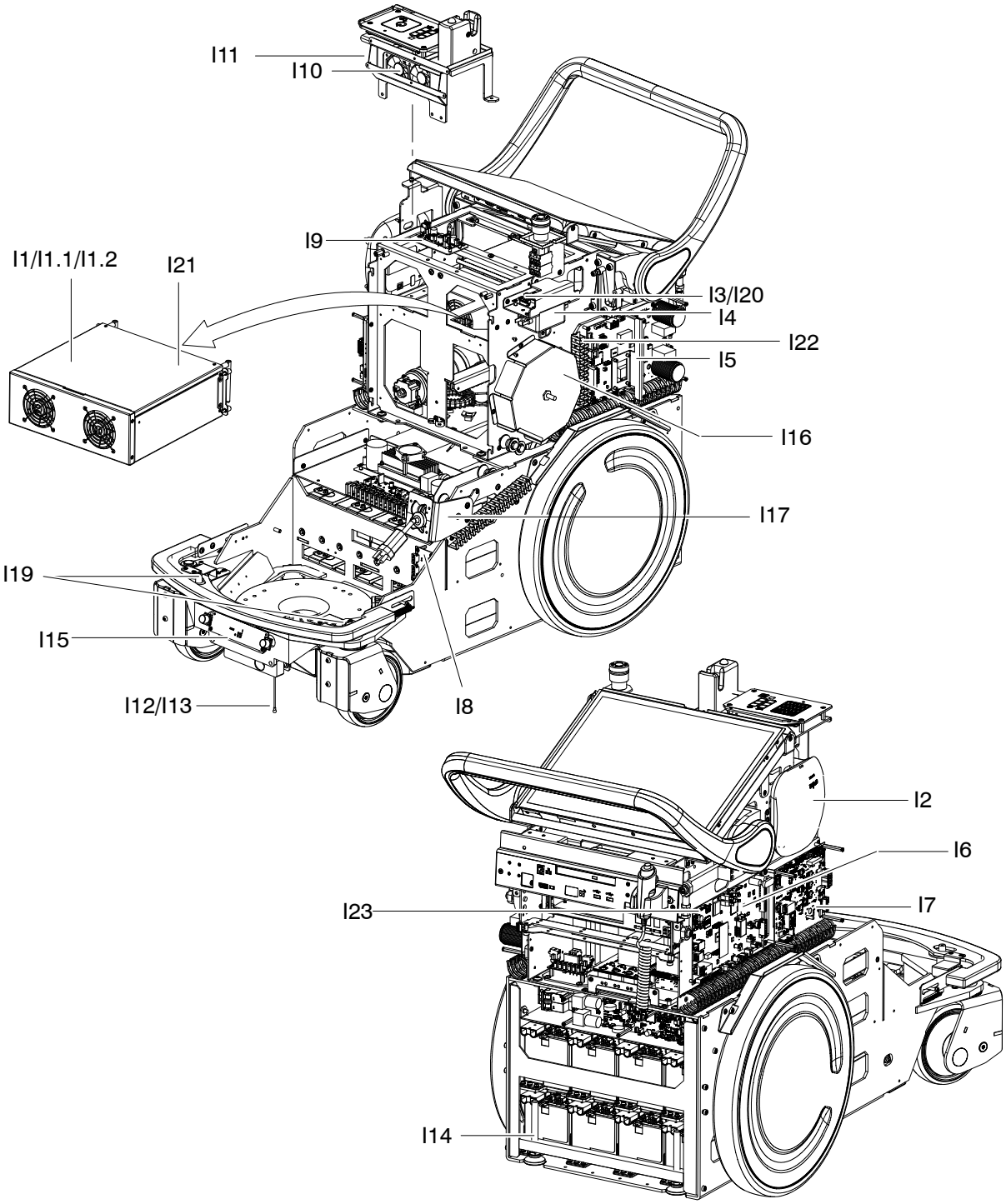
I11
I10
I9
I1/I1.1/I1.2
I21
I3/I20
I4
I22
I5
I16
I17
I19
I15
I12/I13
I8
I2
I6
I23
I7
I14

I1

I1.1

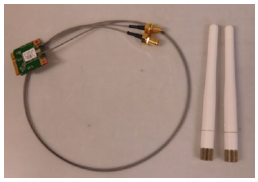

I2

I3

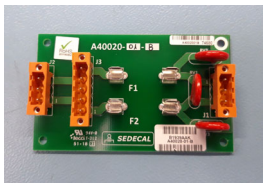

I4

I5

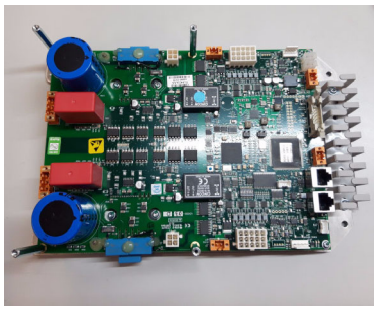

I6

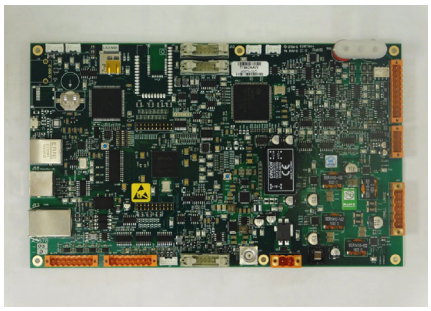

I7

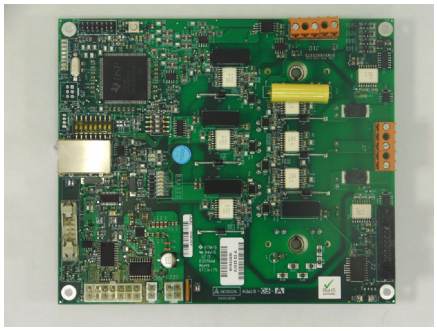

I8

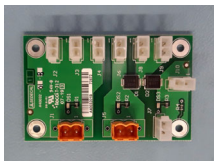

I9

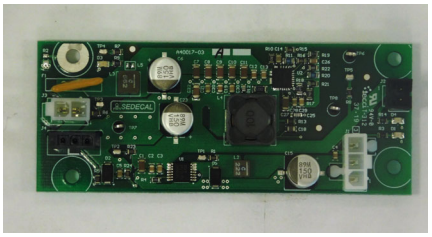

I10

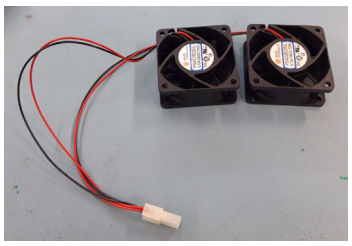

I11

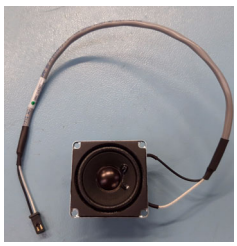

I12

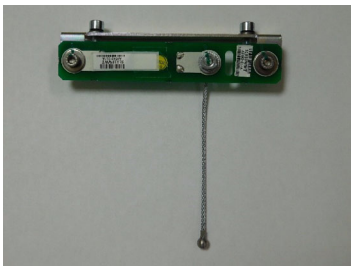

I13

I14

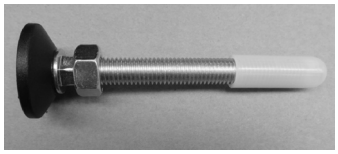

I15

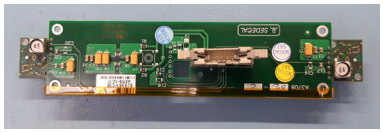

I16

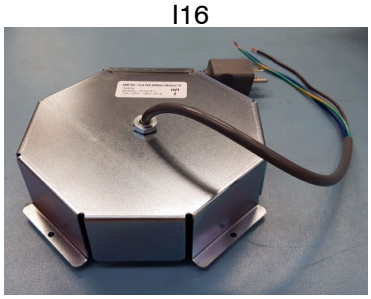

I17

I18

I19

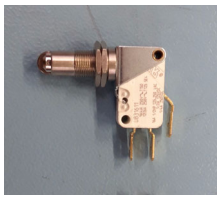

I21

I22

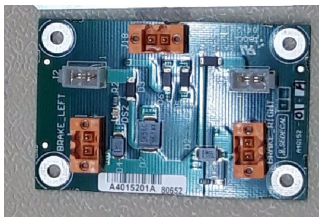

I23

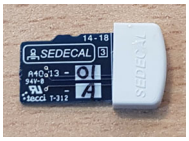

This page intentionally left blank.

ITEM	DESCRIPTION	QTY	REFERENCE	REMARKS
J	**FRONT TRAY**			
J1	Power Supply for Digital Detector	1	SAT-A40036-03	
J2	PFC 1600	1	SAT-A9577-06	
J3	Power Supply 24V	1	SAT-CC00540	
J4	Guide Cable Kit	1	A526529-01	

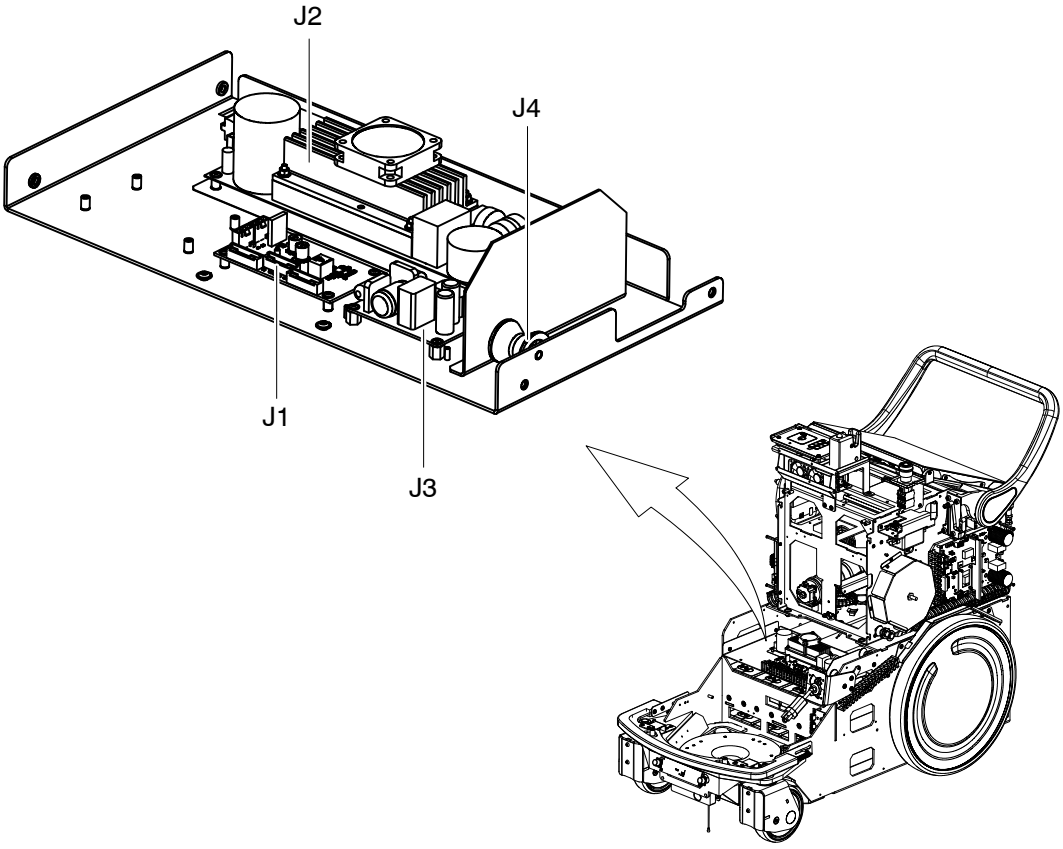

J1

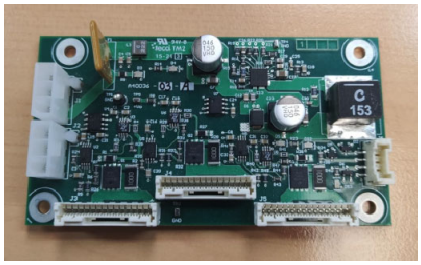

J2

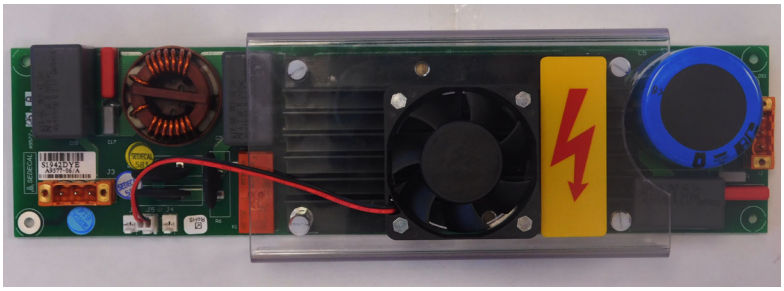

J3

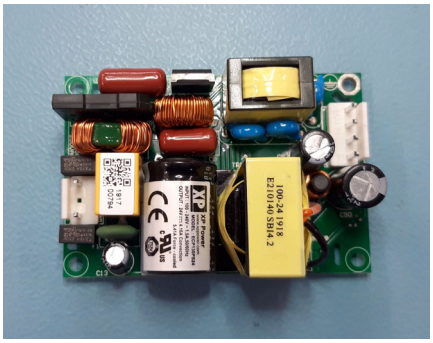

J4

ITEM	DESCRIPTION	QTY	REFERENCE	REMARKS
K	**BACK TRAY AND POWER SUPPLY MODULE**			
K1	Power Supply	2	SAT-CC00381	
K2	PBA Interconection Supply	1	SAT-A40031-01	
K3	Rechargeable Battery	1	SAT-CC00384	
K4	PBA GPIO Trolley	1	SAT-A40001-06	
K5	Contactor	2	SAT-A21472-01	
K6	Thermomagnetic Kit	1	SAT-CC00613	

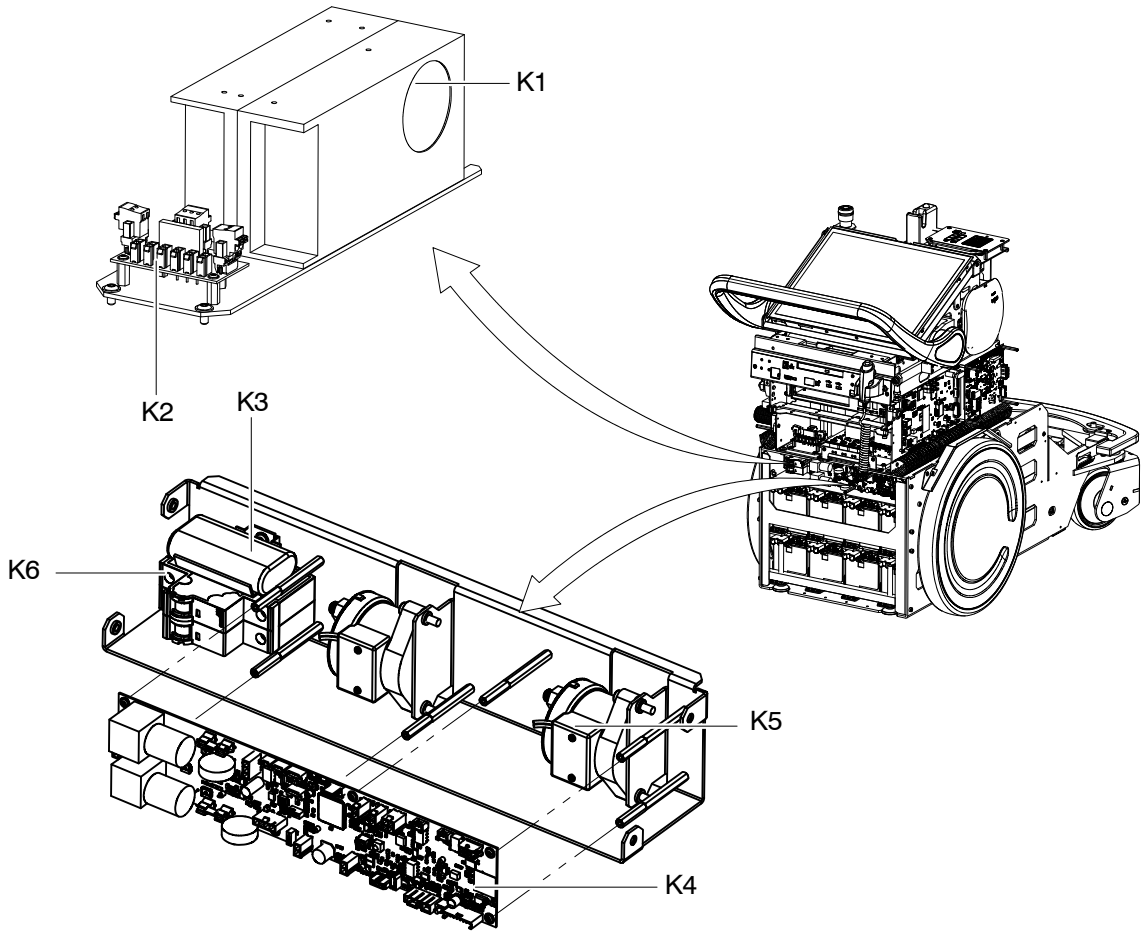

K1

K2

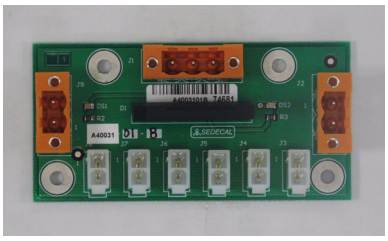

K3

K4

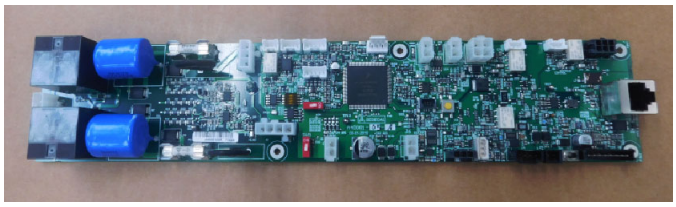

K5

K6

ITEM	DESCRIPTION	QTY	REFERENCE	REMARKS
L	**INVERTER MODULE**			
L1	Capacitor	2	SAT-54002011	
L2	IGBT + PBA Driver CR	2	A526553-01	
L3	Current Sensor Kit	1	A526530-01	
L4	Coil	1	SAT-A6081-01	
L5	BUS BAR IGBT Kit	1	A526554-01	
L6	Capacitor 4uF 1200V	2	SAT-S0007400	

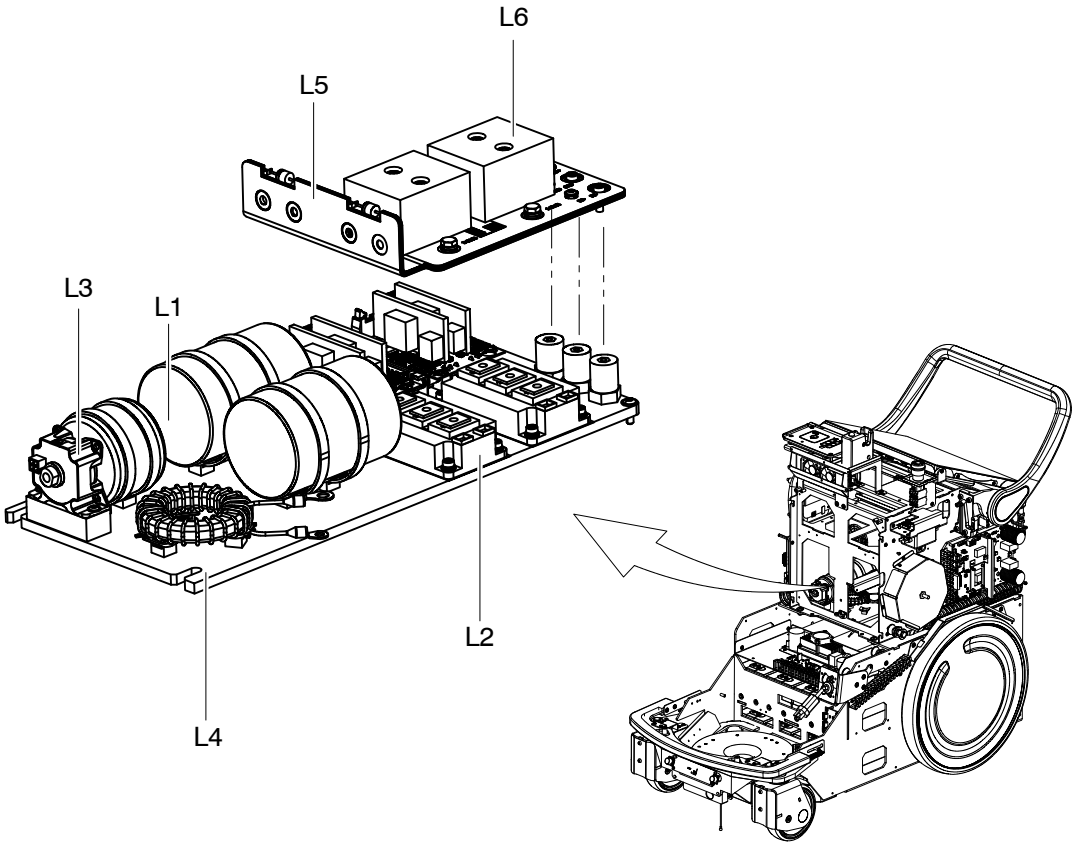

L1

L2

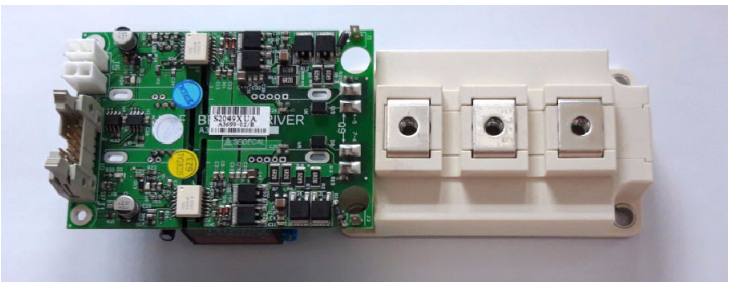

L3

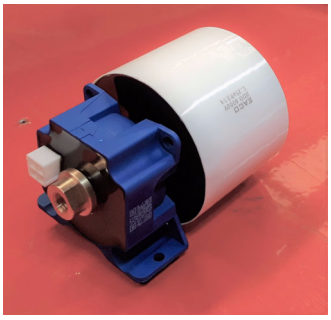

L4

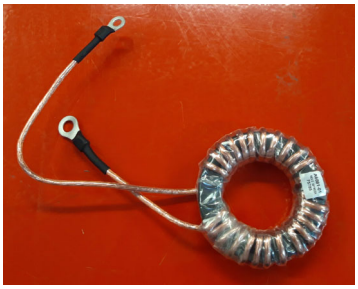

L5

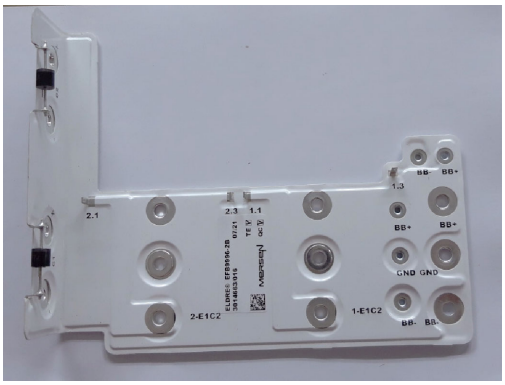

L6

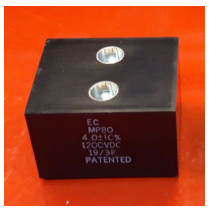

ITEM	DESCRIPTION	QTY	REFERENCE	REMARKS
M	**BATTERY TRAY**			
M1	Battery Tray Pb Mobile IV	8	A526573-01	
M2	Battery Charger	8	SAT-A9591-04	
M3	Battery Pb 15Ah	32	SAT-50512013	
M4	Spare Red Battery Terminals in Mobile IV	1	A526555-01	

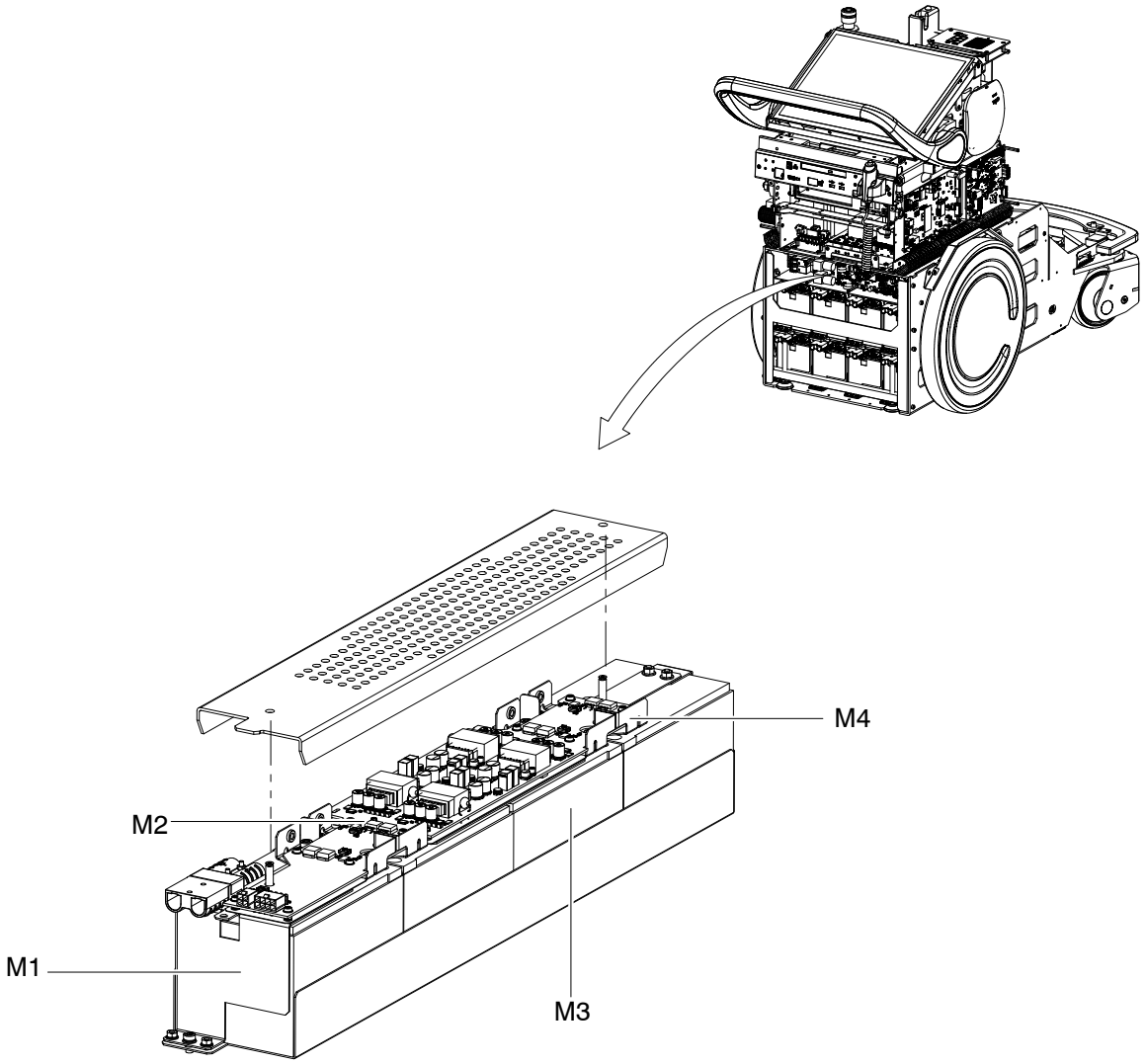

M1

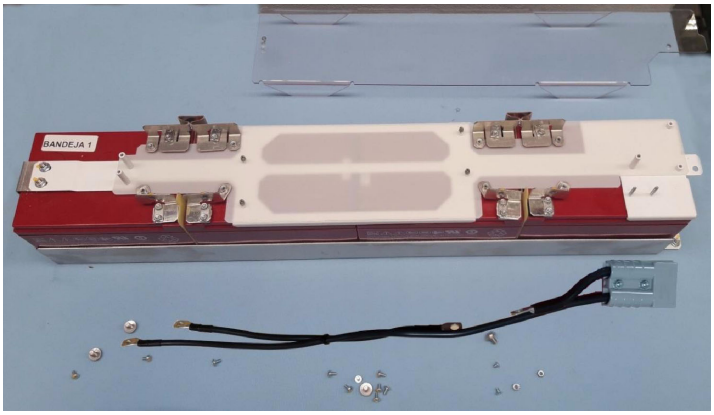

M2

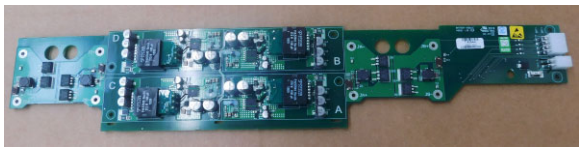

M3

M4

ITEM	DESCRIPTION	QTY	REFERENCE	REMARKS
N	**MISCELLANEOUS**			
N1	Cable White Cover 2500/40	1	SAT-CC01317	
N2	Cable White Cover 600/40	1	SAT-CC01318	
N3	Tools Kit	1	SAT-AS00744	Located under the Detector Box
N4	Cable Tools for Telescopic Column	1	SAT-20833-01	
N5	Spring Tensor and Pawl Locking Screw Tools for Telescopic Column	1	SAT-AS00794	
N6	Magnetic Support for Hygienic Gel Bottle	1	SAT-AS00476	
N7	Magnetic Support for Glove Box	1	SAT-AS00477	
N8	Hardware Screw Mobile IV Kit	1	A526570-01	
N9	Kit Logos	1	-	This kit contains the set of logos to be attached to the covers of the unit. Please, provide the serial number of the unit to order this item.

N1/N2

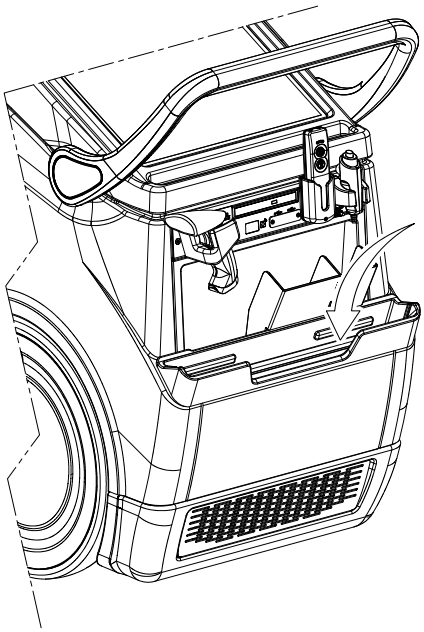

N3

N4

N5

N6

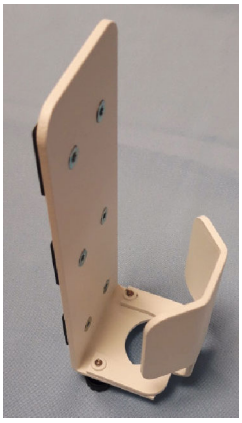

N7

This page intentionally left blank.