MODEL R72

MANUALLY OPERATED
X-RAY COLLIMATOR

0051

C US

INSTRUCTIONS MANUAL- MTR72/170A

Translated from the Italian manual MTR72

Date of issue:	Date of Revision:	Issued by:
February 2001	April 2002	RALCO DIR, RALCO AQ, RALCO M.T.

DOCUMENT EFFECTIVITY

REVISION N.	DATE	COMMENTS
A	10.04.2002	MRD/007/02 - Modification of Spare parts - modified pages: Charter L) - SPARE PARTS and P) - FIGURES, DIAGRAMS, TABLES.

CONTENTS

A) WARNINGS ..... A—1
B) DESCRIPTION ..... B—1
Table on the front panel: ..... B—3
C) SPECIFICATIONS: ..... C—1
Included with the collimator : ..... C—1
Optional: ..... C—1
Symbols ..... C—2
COMPATIBILITY WITH X-RAY TUBE HOUSING ASSEMBLIES: ..... C—3
D) MOUNTING THE COLLIMATOR TO THE X-RAY TUBE: ..... D—1
E) ELECTRICAL POWER CONNECTION: ..... E—2
Power supply connection: ..... E—2
F) COLLIMATOR CALIBRATION: ..... F—1
1. Collimator to Focal Spot Alignment (Primary shutter Cut-off). ..... F—1
2. Centring the x-ray field with the light field ..... F—1
Light field to x-ray Field Alignment. ..... F—2
Field Size Indication Adjustment. ..... F—3
1) Shutter Dial Pre-Adjustment: ..... F—3
2) Shutter Dial Calibration: ..... F—3
Crosshairs, Alignment ..... F—4
Friction Brake Adjustment ..... F—4
G) Compliance verification G-1
H) OPERATION INSTRUCTIONS ..... H—1
Light/x-ray field, adjustment: ..... H—1
I) ROUTINE MAINTENANCE ..... I—1
J) TROUBLESHOOTING ..... J—1
K) SUBSTITUTIONS, DISASSEMBLY, TRANSPORT ..... K—1
Substitutions: ..... K—1
Substitution of the lamp: ..... K—1
Disassembly ..... K—1
Transport ..... K—1
L) SPARE PARTS: ..... L—1
Label: ..... L—1
M) REPAIRS ..... M—1
N) END OF LIFE DISPOSAL ..... N—1
O) WARRANTY: ..... O—1
P) FIGURES, DIAGRAMS, TABLES ..... P—1

Figure 1 ..... *P—1*
Figure 2 ..... *P—2*
Figure 3 ..... *P—3*
Figure 4 ..... *P—4*
Figure 5 - Parts Breakdown ..... *P—5*
Diagram 1 -Wiring R72/170A. ..... *P—6*

A) WARNINGS

TO THE USER OF THIS MANUAL

THE COLLIMATOR DESCRIBED HEREIN IS TO BE ISTALLED ON A GENERAL PURPOSE UNIT CONFORMING TO CEE 93/42, IEC NORMS IEC 601-1, IEC 601-1-2, IEC 601-1-3 AND 21 CFR SUB CHAPTER J OF THE CODE OF FEDERAL REGULATIONS.
CONFORMITY IS ENSURED ONLY IF THE COLLIMATOR IS INSTALLED AND USED AS INDICATED IN THIS MANUAL.
THE USER OF THIS MANUAL IS REQUIRED TO READ AND CAREFULLY REVIEW THE INSTRUCTIONS AND CAUTIONS CONTAINED HEREIN EVEN IF THE PERSON IS PERFECTLY CONVERSANT WITH THE INSTALLATION OF X-RAY COLLIMATOR.
COLLIMATOR INSTALLATION AND SERVICE IS TO BE PERFORMED BY PERSONNEL AUTHORISED BY THE MANUFACTURER OF THE X-RAY SYSTEM OR BY RALCO SRL.
ANY PERSON ASSEMBLING, REPAIRING OR REPLACING THE COLLIMATOR INTO AN X-RAY SYSTEM MUST VERIFY COMPLIANCE WITH SAFETY STANDARDS COVERING ELECTROMEDICAL EQUIPMENT AND PERFORMING A SERIES OF TESTS INDICATING COMPLIANCE WITH 21 CFR SUB CHAPTER J OF THE PERFORMANCE STANDARDS. RECORDING THE DATA OBTAINED BEFORE RELEASING THE COLLIMATOR FOR USE IS REQUIRED, SUCH DATA WILL DEMOSTRATE AT LATER TIME THAT ALL TESTS WERE PERFORMED AND THE EQUIPMENT WAS LEFT IN FULL COMPLIANCE WITH THE STANDARDS.
PROPER INSTALLATION, OPERATION AND MAINTENANCE OF THE COLLIMATOR SHOULD EXCLUDE OPERATION PROBLEMS OF THE COLLIMATOR AND OF THE SURROUND EQUIPMENT SINCE RALCO HAS SUCCESSFULLY PASSED EMC TESTING.

THE USEFUL X-RAYS AND SCATTERED RADIATION ARE DANGEROUS TO BOTH OPERATOR AND OTHERS IN THE VICINITY UNLESS ESTABLISHED SAFE EXPOSURE PROCEDURES ARE STRICTLY OBSERVED.
THOSE AUTHORISED TO OPERATE OR SERVICE THE EQUIPMENT MUST BE THOROUGHLY FAMILIAR WITH THE PROCEDURES REGARDING RADIATION PROTECTION..
FAILURE TO FOLLOW THE MANUFACTURER'S INSTRUCTIONS, OR MODIFICATION OF ANY COMPONENT BY USER OR ASSEMBLER WHICH WILL AFFECT RADIATION SAFETY, CAUSES THE USER OR ASSEMBLER TO ASSUME FULL RESPONSIBILITY FOR THAT PRODUCT.

THE INSTRUCTIONS MANUAL SUPPLIES INDICATIONS ON STANDARD OPTIONAL MATERIAL. SPECIFIC DATA REGARDING THE VERSION PURCHASED IS PROVIDED BY THE LABEL OR BY ANNEXED DOCUMENTATION

THIS DOCUMENT WAS TRANSLATED FROM THE ITALIAN VERSION MTR302/A, ISSUED AND DISTRIBUTED BY RALCO SRL MANUFACTURER OF THE X-RAY COLLIMATOR DESCRIBED. ADDRESS ENQUIRIES TO:

RALCO SRL
VIA SCHIAPPARELLI 27/33
20035 LISSONE (MI)- ITALIA
FAX. +39-039-2456958 - EMAIL: RALCO@RALCO.IT

B) DESCRIPTION

External cover in ABS plastic.

Single-layer, square field radiological collimator.
Its light weight and compact size allow easy positioning and make it ideal for portable units.

The X-ray field size is limited by two pairs of lead shutters controlled by two knobs located on the sides of the collimator and by a lead disc near the x-ray focus to reduce scattered radiation.
An indexed scale provides information on the field set with the knobs.

Specifications:

- Adjustment of mirror angulation may be performed by removing the outside cover.
- High luminosity of the light field projected by a quartz iodide lamp.
- Radiation protection up to 125 kVp - 4 mA
- Inherent filtration 2mm aluminium equivalent. (1mm on request)
- Continuous film coverage from 0x0 cm ± 1% to 43x43 cm at an FFD of 90cm.

Model R72 is a square field X-ray collimator designed for installation **on fixed anode tubes**. By means of two knobs placed a 90° one from the other, it allows the stepless adjustment of the X-ray field dimension to the size of the image receptor or to that of the anatomical area of interest.

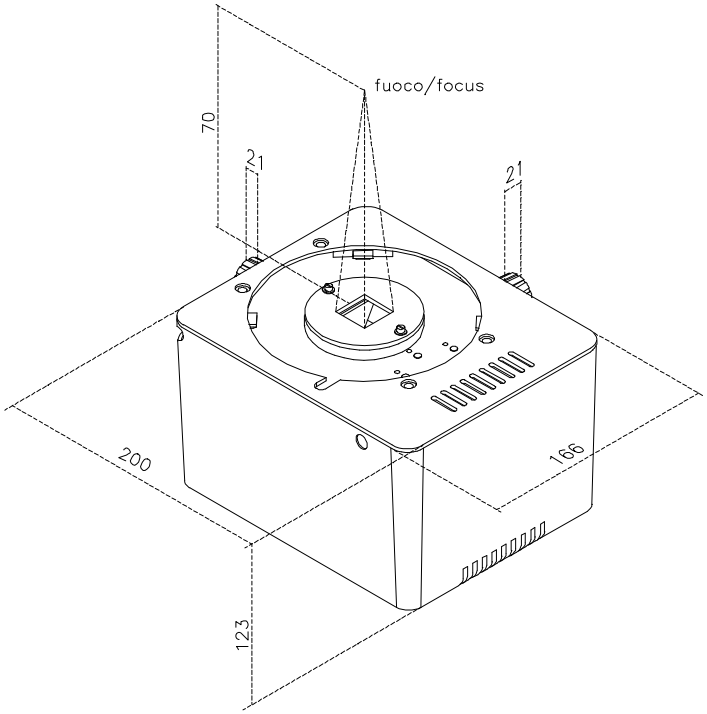

The Collimator body contains 2 pairs of lead faced shutters controlled by means of two knobs. The shutters are positioned near the exit window.

The direct visualisation of the x-ray field is given by a light beam which correspond to the x-ray beam, within a tolerance of one percent of the selected distance. The light-field centre is provided by the intersection of two perpendicular silk-screened lines into the Lexan window and projected on the light field by the light beam.

The light will switch on for 30 seconds (adjustable) and ı automatically switch off.

Average illumination at 1m is minimum 160 Lux with a 100W,24V quartz iodide lamp; edge contrast ratio is >3:1

The field size at 90cm, 100cm and 180 cm Focus-Film Distances (FFD) (SID) is read on the collimator panel.

Table on the front panel:

The table on the front panel shows the number to be set with the knobs. The number to be set is read by crossing the FFD-SID value in use with the cassette size in cm on inches.

i.e. at 90 cm FFD(36" SID) and using an 18 cm (7") cassette size, the field to be set would be 32.

inch cm	36" 90	40" 100	72" 180
5"/13	23	21	11.5
7"/18	32	29	16
10"/24	43	39	22
12"/30	53	48	28
14"/35	61	55	31.5
16"/40	70	63	36
17"/43	75	68	39

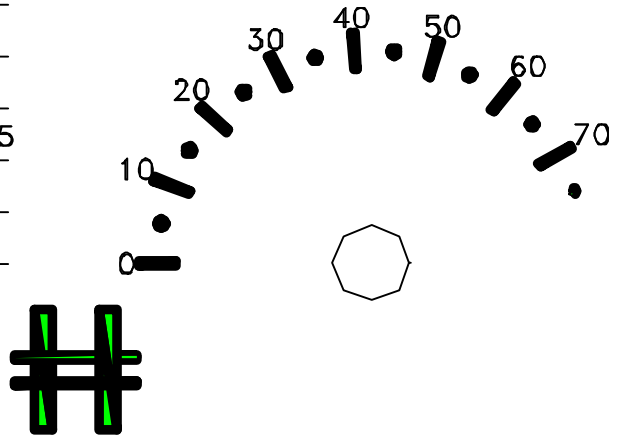

C) SPECIFICATIONS:

• Maximum protection against radiation leakage:	125 kVp - 4mA
• Field coverage a 90 cm FFD (SID):	min. 0x0cm ±1% FFD max. 43 x 43 cm - ±1%FFD
• Indicator precision	corresponds to the X-ray field with tolerance less than 2% of the FFD (SID) used
• Inherent filtration, Al. Equivalent:	2.0 mm. Minimum.
• Lamp power requirement:	24 volts DC/AC 50/60 Hz 5A – 12V optional
• Lamp ON time • Lamp type: • Lamp support	≅30 seconds OSRAM HLX 64638-100W – 24V Z05.905/3442
• Weight:	3,6 Kg (8lbs)

- Classification
  EN 60601-1 par. 5
- Protection against electric hazards: **"Class I**" equipment
- Protection against direct and indirect contacts: **Type B** equipment with applied parts.
- Protection against water seepage : "**Common equipment**"
- Safety of operation in the presence of inflammable anaesthetics with air or oxygen or nitrous oxide: **Equipment not suited to application in the presence of inflammable anaesthetic mixtures containing air o oxygen of nitrous oxide.**.
- Operation conditions: **Equipment for continuous operation at intermittent loads .- See Operation Instructions on page H—1.**

Should label data on the collimator not correspond to the specifications herein, inform Ralco of the non conformity.
Verifications of the specifications are to be performed according to the Standards relating to specified equipment.

Included with the collimator :

- Instructions Manual
- Retractable measuring tape shows the Focus Film Distance (FFD - SID).

Optional:

- RO 002: Mounting spacers 1.5 mm (0.05") thick, steel (to increase focus-to-collimator fixing plane distance.
- RO 198: Focus/skin spacer to keep the patient at a safe distance.
- Tube port mounting flanges:
  - RO 199 - Rotating ±90°, stop at 0°, thickness 10mm.
  - RO 181 - Fixed flange, 10mm thickness
  - RO 170 - Fixed flange, thickness 7 mm

- RO 051 - Fixed flange, thickness 18mm
- RO 001 - Fixed flange, thickness 20 mm

Symbols

SIMBOLI/ SYMBOLS	DESCRIZIONE /DESCRIPTION.	NO.	RIF.CEI
	Corrente Alternata/Alternating Current	01-14	417-IEC 503
	Corrente Continua/Direct current	01-18	417-IEC 5031
	Corrente continue e Alternata/Both direct and alternating current	01-19	417-IEC 5033
	Terra di protezione/protective earth	01-20	417-IEC 5019
	Più; polarità positiva/Plus; positive polarity	01-27	417-IEC 5005
	Meno; polarità negativa/ Minus; negative polarity	01-28	417-IEC 5006
	Entrata/ Input	01-36	417-IEC 5034
	Uscita/ Output	01-37	417-IEC 5035
	Controllo a distanza/Remote Control	01-38	-
	Controllo manuale/Manual control	01-45	ISO 7000-096
	Controllo automatico/ Automatic control (closed loop)	01-46	ISO 7000-0017
	Diaframma a iride aperto/ Iris diaphragm:open	01-69	417-IEC 5323
	Diaframma a iride: chiuso/ iris diaphragm: closed	01-70	417-IEC 5324
	Attenzione, consultare i documenti di accompagnamento/ Attention, consult accompanying documents	03-02	IEC 601-1
	Filtro di radiazione oppure filtrazione / Radiation filter or filtration	04-51	417-IEC 5381

SIMBOLI/ SYMBOLS	DESCRIZIONE /DESCRIPTION.	NO.	RIF.CEI
	Indicatore luminoso del campo di radiazione/ Light indicator of the radiation field	04-54	417-IEC 5384
	Dispositivo di limitazione fascio: aperto/ Beam limiting device: open	04-55	417-IEC 5385
	Dispositivo di limitazione fascio: chiuso Beam limiting device: closed	04-56	417-IEC 5386
	Dispositivo di limitazione fascio con apertura separata della lamelle. Beam limiting device with separate opening of the shutters	04-57	417-IEC 5387
	Dispositivo di limitazione fascio con chiusura separata della lamelle. Beam limiting device with separate closing of the shutters	04-58	417-IEC 5388
	Apparecchio tipo B/type B unit		878-02-02
	Attenzione radiazione Laser/Caution Laser Radiation		60825-1

COMPATIBILITY WITH X-RAY TUBE HOUSING ASSEMBLIES:

Compatibility is determined by the ability to comply mechanically with the dimensional drawing on Figure 1 page P—1; that the tube housing assembly must have a minimum inherent filtration of 1 mm. Al. equivalent and a maximum radiation leakage of 50 mr/hour measured at one meter from the source when operating at its leakage technique factors (125 kVp at 4 mA).
Source values (tube housing-collimator) must not be less than 3mm Al for filtration and must never exceed 100 mR/hr for radiation leakage.

D) MOUNTING THE COLLIMATOR TO THE X-RAY TUBE:

WARNING

CAREFULLY FOLLOW THE MOUNTING INSTRUCTIONS AND MAKE SURE THAT THE COLLIMATOR IS CORRECTLY ASSEMBLED. INCORRECT MOUNTING COULD BE DANGEROUS: IT COULD CAUSE THE COLLIMATOR TO FALL OR TO OPERATE INACCURATELY

1. Determine the distance from the focal spot to the tube port face from the x-ray tube or generator literature.

2. Subtract the resulting distance from 70 mm (2,75") and determine how many 1.5 mm (0.05") spacers combined with the thickness of the mounting flange will be required to make up the difference. See Figure 4 on page P—4

3. The outer face of the collimator mounting flange must be at 70mm from the focal spot. Allowable tolerance is 1 mm. (0.039"). - see Figure 4 on page P—4

4. Select four bolts of suitable thread (M6) and of such a length that they protrude through the flange and spacers far enough to engage at least 5 threads into the tube port face. Securely bolt the flange to the tube port face.
5. Remove the cover by unscrewing the four M3 screws located on the lower side of the cover.

6. Unscrew the four mounting and centring adjustment Allen screws M6 until the four tongues are withdrawn from the collimator top opening; see Figure. 1 – page P—1.

Note: when unscrewing the Allen screws that control the tabs do not use force exceeding 0,55 Nm

7. Place the collimator on the flange. Tighten the four mounting screws equally until the collimator is held firmly on the flange (0,55Nm max), see Figure. 1 – page P—1.

8. Check to see that the distance from the collimator housing to the mounting flange is equal in all directions and that the collimator face is parallel to the axis of the table.
9. Repeat the alignment if necessary.

E) ELECTRICAL POWER CONNECTION:

CHECK ON THE COLLIMATOR LABEL THE VERSION SUPPLIED.

WARNING

COLLIMATOR SUPPLY IS NOT PROTECTED BY A FUSE. CHECK THAT THE COLLIMATOR IS PROTECTED BY AN EXTERNAL FUSE PRIOR TO CONNECTION.

FUSE REQUIREMENTS: 4A DELAYED FOR THE 24v VERSION.

CABLES AND TERMINALS USED FOR THE INTERNAL CONNECTION OF THE COLLIMATOR MUST BE SUITABLE FOR OPERATION AT TEMPERATURES OF 70° C AND COLLIMATOR CURRENT ABSORPTION.

Collimator supply must conform to MDD 93/42

Power supply connection:

- Unscrew the 4 screws on the lower portion of the cover; remove the cover.
- Connect the the cables to the terminal board contacts M3 (+Vcc) e M5 (0V)
  - Refer to the diagram on page P—6..
- Connect the earth cable to the appropriate screw marked by the symbol: ⏚
- Remount the cover.

WARNING

INCORRECT POWER SUPPLY COULD DAMAGE THE ELECTRONIC TIMER AND/OR THE LAMP.

SUPPLY TO THE QUARTZ IODIDE LAMP AND TIMER MAY BE EITHER IN ALTERNATE CURRENT OR DIRECT CURRENT - IN THE LATTER CASE MAKE CERTAIN THE POLARITY IS RESPECTED.

F) COLLIMATOR CALIBRATION:

WARNING:
THE FOLLOWING PROCEDURES REQUIRE THAT X-RADIATION BE PRODUCED. TAKE ADEQUATE PRECAUTIONS TO SEE THAT NO PART OF THE HUMAN BODY IS EXPOSED TO X-RADIATION, DIRECT OR INDIRECT.

1. Collimator to Focal Spot Alignment (Primary shutter Cut-off).

Inspect the four images of the four collimator shutters which form the edges of the x-ray field. A definitely indistinct edge indicates that the primary shutter, close to the focal spot, is the one forming the line, rather than the outermost shutter.
No correction is possible, contact the manufacturer.

NOTE: The heel effect will cause the field toward the cathode to be slightly less sharp than on the other three sides . This is normal and cannot be corrected by adjustment. In addition, an x-ray tube of 12 ° or less target angle will produce an asymmetrically shaped field when a large field size is used at short FFD (SID), because of anode cut-off effect. This is normal and may not be corrected by adjustment.

2. Centring the x-ray field with the light field

Place a 35x43 cm. (14x17") cassette on the table top or other flat, horizontal surface and **position the x-ray tube/collimator assembly with the focal spot at 1 meter (40") above and with the x-ray beam perpendicular to the cassette surface**. Do not use equipment scales for reference, but measure the distance from focal spot to cassette surface.

Note:
if one meter FFD (SID) cannot be obtained, use the obtainable FFD (SID) that is closest to one meter and calculate the measurement tolerances as the appropriate percentages of the distance.

If the x-ray beam cannot be oriented vertically, then make provision by using clamps, masking tape, etc. as required to place the test objects and image receptor at the specified FFD (SID) and perpendicular relative to the x-ray beam as described in the following procedures.

Use the collimator light to centre the cassette in the field.

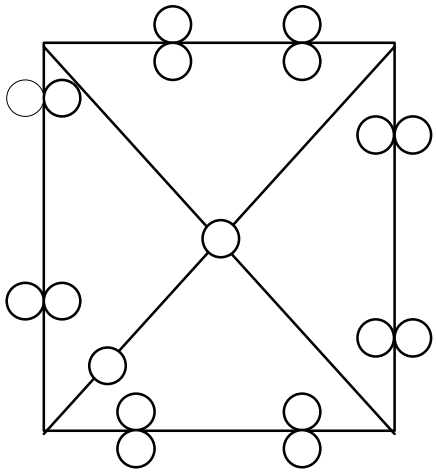

- Mark the location of the cassette with masking tape or other means so that it may be removed and replaced in the same position.
- Place white paper on top of the cassette to provide maximum contrast for the light field.
- Set the collimator to provide a field size of 30x30 cm. (12x12") at one meter (40").
- Activate the light field and use it to position 18 coins as shown in the diagram.
- Position each pair of coins touching one another so that the inner coin is lighted as much as possible and the outer coin is lighted as little as possible.
- The points of tangency will define the edges of the light field. Place the extra two coins, one in the lower left corner, which will provide the means for adjusting the film, the second in the centre of the light field. To find the centre draw two diagonals across the light field , the meeting point will determine the centre.
- Set the technique factors at the x-ray generator to produce a density of about 1 (about 50 kVp, 5 mAs).
- Make an exposure. Remove the cassette and process the film. Use the test film to check the alignments: described in the following paragraphs.

Light field to x-ray Field Alignment.

EN 60601-1-3 par 29.202.9 - CFR 21 Sub-chapter J 1020.31(d)(2)

Misalignment of the light field to the x-ray field in either the X (cross table) or Y (long table) direction must not exceed 2% of the FFD. In this case, it would be less than 20 mm (0.78"). If the test film shows that the light field (shown by the shadows of the markers) matches the x-ray field (shown by the shadow of the collimator shutters) to within the diameter of one marker and, if the diameter is less than 20 mm then alignment complies with the regulations.

Greater precision is possible. The recommended maximum deviation is one fourth. You are urged to adjust for the greatest obtainable degree of congruency.

If misalignment is detected in both X and Y directions, check that the spacing from the focal spot to the collimator mounting surface is 70 mm. +/- 1 mm. (2.75" +/-.039"). If the spacing requires adjustment, repeat the test film exposure after the adjustment.
If the collimator mount spacing is correct, but adjustment is still necessary, do not move the collimator relative to the x-ray tube, but proceed as follows:

- Place the test film on the face of the cassette over the white paper and place the cassette in the position originally marked.
- Check the correct position of the film by the shadows cast by the markers.
- Using the images of the collimator shutters as the reference for the shape and size of the x-ray field, adjust the light field to match.

- To move the light field in the cross table direction, unscrew the 4 screws on the lower portion of the cover and remove the cover. Loosen the locking screws sufficiently to permit turning of the adjuster cam and allow mirror positioning, (Figure 2 page P—2).
- Lock the fixing screw and cam after adjusting the mirror position, and replace the cover.
- Before moving the light field longitudinally, remove the cover and the dissipator

WARNING: DO NOT IMMEDIATELY TOUCH THE DISSIPATOR WITH YOUR FINGERS IT COULD BE HOT AND CAUSE SEVERE BURNS.

- Loosen the two lamp-support fixing screws and using the hexagonal screw on the side of the lamp, adjust the lamp to make the two fields coincide (Figure 3 – page P—3)

DO NOT TOUCH THE LAMP, THE SOCKET, OR THE LAMP BRACKET WITH YOUR FINGER. THEY CAN BE VERY HOT AND CAUSE SEVERE BURNS.

Do not touch the lamp with your fingers, even when it is cold. Oil from your skin will cause the lamp to crack and possibly explode. If you have touched the lamp, wash off the surface with alcohol, then handle the lamp with a piece of paper.

- Tighten the screws fixing the lamp support.
- To adjust brightness around the edges of the light field, loosen the screws fixing the screens to the lamp holder and by using the Allen screws move screen to obtain the required adjustment. - See Figure 3 page P—3
- Tighten the screws of the screens.
- Repeat the test exposure after adjustment.

Field Size Indication Adjustment.

Regulations state that collimators must indicate the size of the x-ray field at the FFD (SID) in use to within 2% of that FFD.

1) Shutter Dial Pre-Adjustment:

- Rotate the two control knobs to completely close both sets of shutters.
- Use the field light to ascertain that the shutters are in fact closed.
- Check that each indicator is precisely over the dial line marked CLOSED.
- If the indicators read “0” when the shutters are closed, all the other dial indications will prove to be correct.

2) Shutter Dial Calibration:

- Measure the x-ray size field shown on the test film.
- Adjust the Light field to the same dimension and read the measure on the dial.
- If the reading is not within tolerance, adjust the indicator .
- Using a size 2 wrench, loosen the Allen screw placed on the side of the knob.

Crosshairs, Alignment

- Activate the light-field.
- Turn the control knobs to adjust the light-field to a narrow line; each direction in turn.
- Check that the crosshair line is centred in the narrow light line in each direction.
- If adjustment is required, remove the cover and loosen the four screws securing the plastic panel to the collimator and position the plate to centre the cross lines in the light lines.
- Tighten the four screws and replace the cover.

Friction Brake Adjustment

- Friction is adjusted for a shutter movement force of 20 Cnm.
- If a shutter control is too loose and does not hold position, or is too tight and is difficult to turn, adjust the appropriate friction brake to obtain the optimum friction - See Figures 3 and 4 on pages O-3 and O-4 respectively.

G) Compliance verification

To indicate compliance with 21 CFR, sub-chapter J, part 1020 of Performance Standard it is necessary for the assembler to perform a series of tests.
A description of test methods is provided in this chapter but factors, as experience, availability of equipment and tolerances on compliance are referred directly to the Safety Standards covering Electromedical equipment.

1. MINIMUM FILTRATION REQUIREMENT – BEAM QUALITY (HVL)

WARNING:
The following procedures require that x-radiation be produced. Take adequate precautions that no part of human being is exposed to x-radiation, direct or indirect.

The above HVL requirements can be met if it is demonstrated that the aluminium equivalent in the primary beam is not less than that shown in the following table:

Designed operating range (kVp)	measured operating potential (kVp)	minimum HVL (mm. of Al) X-Ray System
Below 50	30	0.3
	40	0.4
	50	0.5
From 51 to 70	51	1.2
	60	1.3
	70	1.5
Above 71	71	2.1
	80	2.3
	90	2.5
	100	2.7
	110	3.0
	120	3.2
	130	3.5
	140	3.8
	150	4.1

Determine the total inherent filtration in Aluminium equivalence in the primary beam (x-ray tube and housing, beam limiting device and any additional filtration in the system). If the total inherent filtration cannot be seen, then the HVL obtained with the following procedures must be compared with those specified in the above table. The HVL in millimetres of aluminium in the system under test must be greater than or equal to the values shown in the above table.

a. Direct the central x-ray beam perpendicular to and in the centre of a RAD-Check instrument. Determine the exact distance from the x-ray tube focal spot to the window of the collimator (275 mm - 10.8”). Place the input area of the RAD-CHECK at an

equal distance from the collimator window. Collimate the beam to an area slightly larger than the detector.

b. Select a tube potential which is the highest in the kVp range; with no added filtration in the beam make an exposure and record the reading. Using the type 1100 Aluminium Alloy (as given in " ALUMINUM STANDARDS AND DATA" verification of compliance), tape the increments of filtration to the window of the collimator. Make an exposure and record the reading for each total thickness of filtration as indicated in the above table. The information contained in the above table was extracted from the Code of Federal Regulations FDA 21 1020.30 (m)

c. Plot the exposure readings (log scale) versus the total added filtration thickness on semilog paper, see sample hereunder. Verify that HLV values in the useful beam for a specific tube are not less than the values shown in the above specified table.

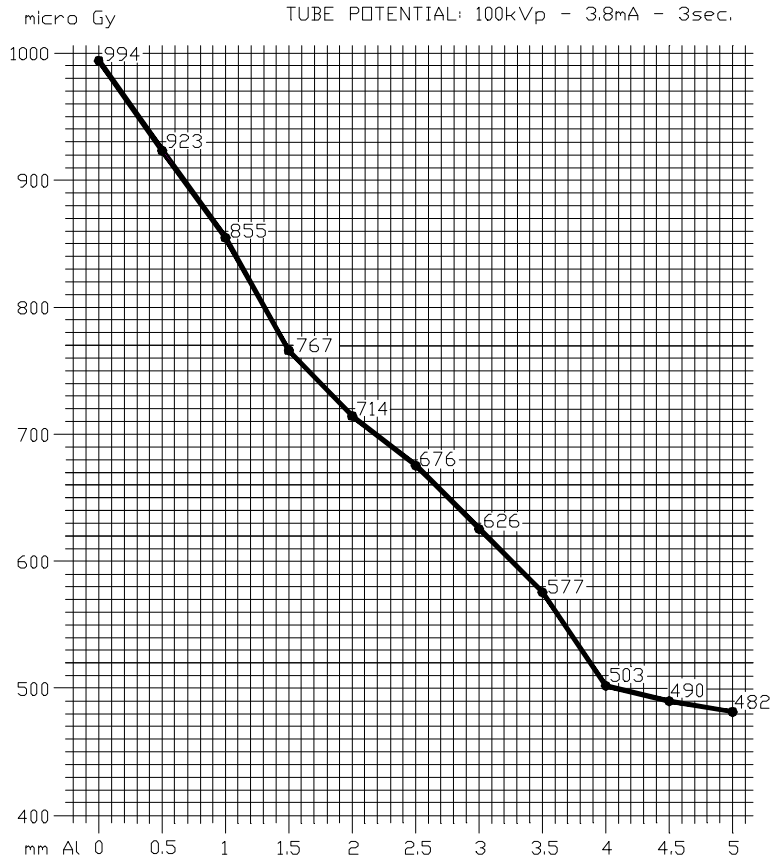

A quick-check confirmation of the minimum filtration requirement at a particular kVp can be made as follows:

At a pre-selected kVp, record an exposure reading with no filtration, then tape a total of 2.5 mm of aluminium on the collimator window: Repeat the exposure with the same tube potential and record the value.

The minimum filtration requirement has been met if the second exposure is greater than or equal to one-half of the first exposure.

2. VISUAL DEFINITION OF X-RAY VERSUS LIGHT FIELD

Applicable Chapter: **COLLIMATOR CALIBRATION:** paragraph 1. Light field to x-ray Field Alignment.page **F—3**

3. FIELD SIZE INDICATION

Applicable Chapter: : **COLLIMATOR CALIBRATION:** paragraph Field Size Indication Adjustment. page F—3.

4. **CROSSHAIR ALIGNMENT**

Applicable Chapter: **COLLIMATOR CALIBRATION:** PARAGRAPH 2 **CROSSHAIRS, ALIGNMENT**PAGE F—4

5. LIGHT FIELD ILLUMINATION INTENSITY

a) When a light field simulating the X-Ray field is used the illumination provided at 100 cm. cannot be less than : 160 lux (21 CFR 1020.31 (d) (2) (ii)

b) Place the Focus of the X-Ray tube at 100 cm. from the table top were the light field as been projected. Open the collimator's shutters to assure that each quadrant of the light field is larger than the measuring area of the photometer.
c) Check that the voltage specified by the manufacturer is applied to the lamp, make certain that all surfaces in the light beam are clean and unobstructed.
d) Place a photometer capable of reading up to 160 lux in the centre of each of the four quadrants of the light field.
e) Turn on the light beam and read the light intensity, subtract to it the ambient lighting, previously determined.
f) Verify that the average illumination is higher than 160 lux. Record the measured lux and all data concerning the instrument and the voltage used.

H) OPERATION INSTRUCTIONS

WARNING

PROLONGED LIGHTING WITHOUT ALLOWING THE LAMP TO COOL CAUSES THE COLLIMATOR TO OVERHEAT IN THE AREA NEAR THE LAMP - THE MAXIMUM LIMIT ADVISED IS 5 SUCCESSIVE LAMP OPERATIONS.

THE OPERATE MUST AVOID OVERHEATING THE COLLIMATOR AND CARE MUST BE TAKEN NOT TO SCORCH HIMSELF OR THE PATIENT

The collimator is normally operated by activating the pushbutton on the lateral panel to switch the light field ON

The collimators has been designed to operate as follows:

- Supply constantly connected during operation of the equipment.
- Quartz iodide lamp ON time for the light field at about 30 s.
- A normal ON/OFF cycle may be repeated twice = 1 minute, followed by 4 minutes OFF.

Light/x-ray field, adjustment:

- Follow the tags of the scale on the front panel and the knob index. See the Table con the collimator.
- Rotate the knobs to select the field at a set FFD.
- Do not force the knobs.
- The collimator is ready – x-rays may be performed.

I) ROUTINE MAINTENANCE

To ensure constantly safe performance of the collimator and its compliance with applicable regulations, a maintenance program is indispensable.

It is the Owner's responsibility to supply or arrange for this service.

Cleaning recommendations

- The collimator housing must be cleaned as prescribed by the sanitary regulations followed by the operator.
- Disconnect supply
- Use non abrasive cleaning products. Care must be taken to prevent liquid from entering the collimator. **N.B.** the collimator cover is not watertight.
- Do no re-apply power if inflammable liquids have leaked into the collimator. See the following Maintenance Instructions.

Recommended maintenance programme:

Ralco suggests a yearly servicing programme. However shorter intervals are advisable when the collimator is subject to heavy workloads.

Re-calibration of the collimator will be necessary whenever the x-ray tube is changed or at each substitution of the lamp used to simulate the light field. Calibration procedures must be performed as described in this manual - page F—1.

1. Remove the covers and panels from collimator. Inspect the moving parts for signs of wear or damage.

2. Check the electric system and substitute parts that show wear.

3. Check the Lexan panel and substitute if necessary.

4. Clean the collimator with a soft cloth paying particular attention to the Lexan window. **Do not** use abrasive or inflammable cleaning products.

5. Sparingly lubricate the moving parts using graphite oil. Wipe away all excess oil.

6. Remount the cover.

J) TROUBLESHOOTING

Should the Collimator become faulty do not use it until completely repaired. The use of a faulty collimator might impair the safety of the operator and patient.
Before returning the collimator to Ralco for repair, please make sure that it isn't one of the following problems to cause the fault

PROBLEM	CAUSE	SOLUTION
The lamp fails to switch on	The collimator is not supplied correctly	**Check** supply/ Tension/current/polarity/ Fuses
	The lamp is faulty	**Check** filaments - substitute if necessary. See Substitution Of The Lamp On Page K—1
The collimator is not centred:	Mirrors are not positioned correctly	**See** Light field to x-ray Field Alignment. Page F—2. **See** COLLIMATOR CALIBRATION: page F—1
Incorrect field dimensions	Knobs are off index	**Loosen** knob screws and adjust - See Field Size Indication Adjustment. page F—3
Light edge definition is not good.	Light screen not aligned correctly	See Figure 3 page P—33

K) SUBSTITUTIONS, DISASSEMBLY, TRANSPORT

Substitutions:

The following operations must be performed by technically prepared and authorised personnel.

See Figure 5 - Parts Breakdown on page P—4

Substitution of the lamp:

WARNING: DO NOT IMMEDIATELY TOUCH THE DISSIPATOR WITH YOUR FINGURES IT COULD BE HOT AND CAUSE SEVERE BURNS.

WARNING: DO NOT TOUCH THE LAMP, THE SOCKET, OR THE LAMP BRACKET WITH YOUR FINGER. THEY CAN BE VERY HOT AND CAUSE SEVERE BURNS.

- Disconnect supply
- Remove the lower cover
- Remove the lamp protection dissipator.
- Carefully remove the faulty lamp.
- Substitute the lamp with an identical lamp (same V, W and filament type)
- Make sure that the pins are completely inserted in the lampholder
- Check on light field/x-ray field correspondence
- If necessary remove the lamp, rotate it 180° axially and re-insert.
- Remount the disconnected items

Disassembly

- Disconnect supply to the collimator.
- Disconnect the supply cables.
- Loosen the 4 fixing screws on the upper part of the collimator - **care must be taken not to let the collimator fall.**

Transport

- Suitable packing must be provided for.
- **Place the collimator in a plastic bag to avoid packing material from entering the collimator.**
- Use an appropriate box for transport or shipment taking care to protect the collimator

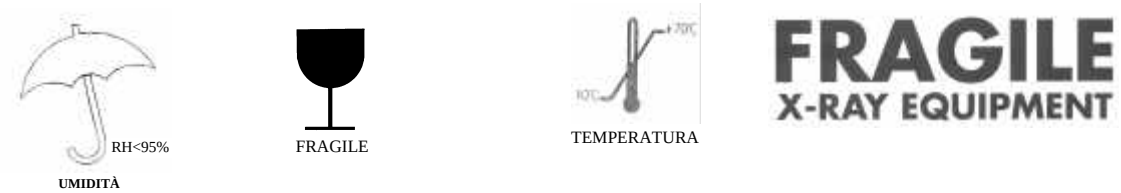

from rough handling. This will avoid damage to the collimator from transport or shipment.

Rev.A

L) SPARE PARTS:

NOTE: WHEN ORDERING SPARE PARTS, THE CLIENT IS REQUESTED TO SPECIFY THE MODEL AND SERIAL NUMBER OF THE COLLIMATOR CONCERNED.

RO 002	STEEL SPACERS, THCIKNESS 1.5 MM
RO 181	MOUNTING FLANGE, FIXED TYPE, 10MM THICKNESS
RO 198	FOCUS-SKIN SPACERS
RO 199	MOUNTING FLANGE, ROTATING TYPE, ±90° WITH STOP AT 0°, 100MM THICKNESS
RS 006	LAMP 100W 24V
RS 033	CERAMIC LAMPHOLDER, CSA
RS 063	TIMER FM338 24V
RS 092	LAMP 100W 12 V
RS 204	TIMER FM338 12V
RS 451	GREY KNOB + R72 INDEX
RS 533	LATERAL PANEL, LONG, AL. WITH INDEX SCALE
RS 534	LATERAL PANEL, CROSS, AL. WITH INDEX SCALE
RS 535	LATERAL PANEL, LONG, AL, WITH INDEX SCALE PLUS PUSHBUTTON HOLE
RS 536	LOWER COVER IN ABS R71(H. 123)
RS 537	UPPER COVER R72 STANDARD
RS 538	RETRACTABLE MEASURING TAPE (STARTING POINT 176MM)
RS 540	ANTIDUST PANEL R72 (CSA)
RS 050	ROUND PUSHBUTTON, BLACK/CHROMED

Label:

M) REPAIRS

- Return the collimator to Ralco At the customer's expense if the unit is out of warranty.
- Provide the collimator with a detailed description (in Italian or English) of the functional problems and/or faults. It is important to indicate whether a repair or a complete overhaul is required.
- Our Quality Control will test the collimator.
- If the repair involved is extensive, Ralco will contact the customer to advise on the repair or possible substitution.

N) END OF LIFE DISPOSAL

Your collimator contains materials which can be recycled and reused. Specialised companies can recycle your product to increase the amount of reusable materials and to minimise the amount of materials to be disposed of.
Please inform yourself on local regulations on disposal of your old set.

O) WARRANTY:

Ralco guarantees free of charge labour and replacement parts during a period of 12 months from the date of shipment of the material.
The Ralco warranty applies provided the product has been handled properly in accordance with its operating instructions and upon presentation of the original invoice indicating the date of purchase the model and serial number as well as other control documents originally supplied with the set.
The Ralco warranty may not apply if:

- the documents have been altered in any way or made illegible;
- the model or production number on the product has been altered, deleted, removed or made illegible;
- repairs or product modifications and alterations have been executed by unauthorised persons;
- damage is caused by misuse or neglect, incorrect installation or accidental damage including but not limited to lighting, water or fire.

In-warranty spares will be available only upon return to Ralco, at the customer's expense, of the parts considered to be faulty to assess the cause of the fault..

Defective material is to be sent to:

Ralco srl
Via Schiapparelli 27/33
20035 LISSONE MI - Italia
Fax. + 39-039-2456958
Email: ralco@ralco.it

Rev.A

P) FIGURES, DIAGRAMS, TABLES

NOTE: SHOULD THE ELECTRIC DIAGRAM REQUESTED BY YOU DIFFER FROM THE STANDARD UNIT SUPPLIED – PLEASE SEE THE ATTACHMENTS.

Figure 1

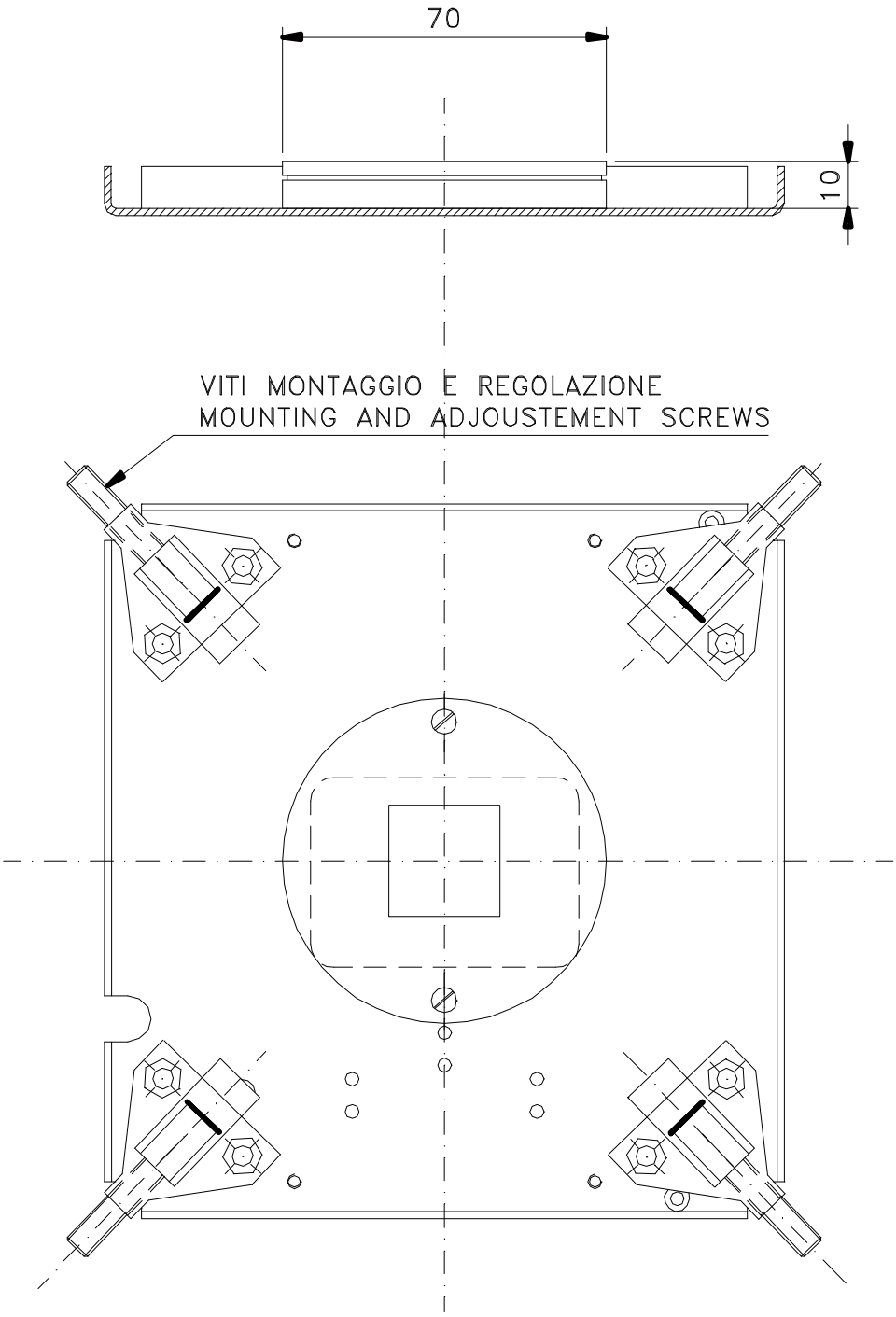

Figure 2

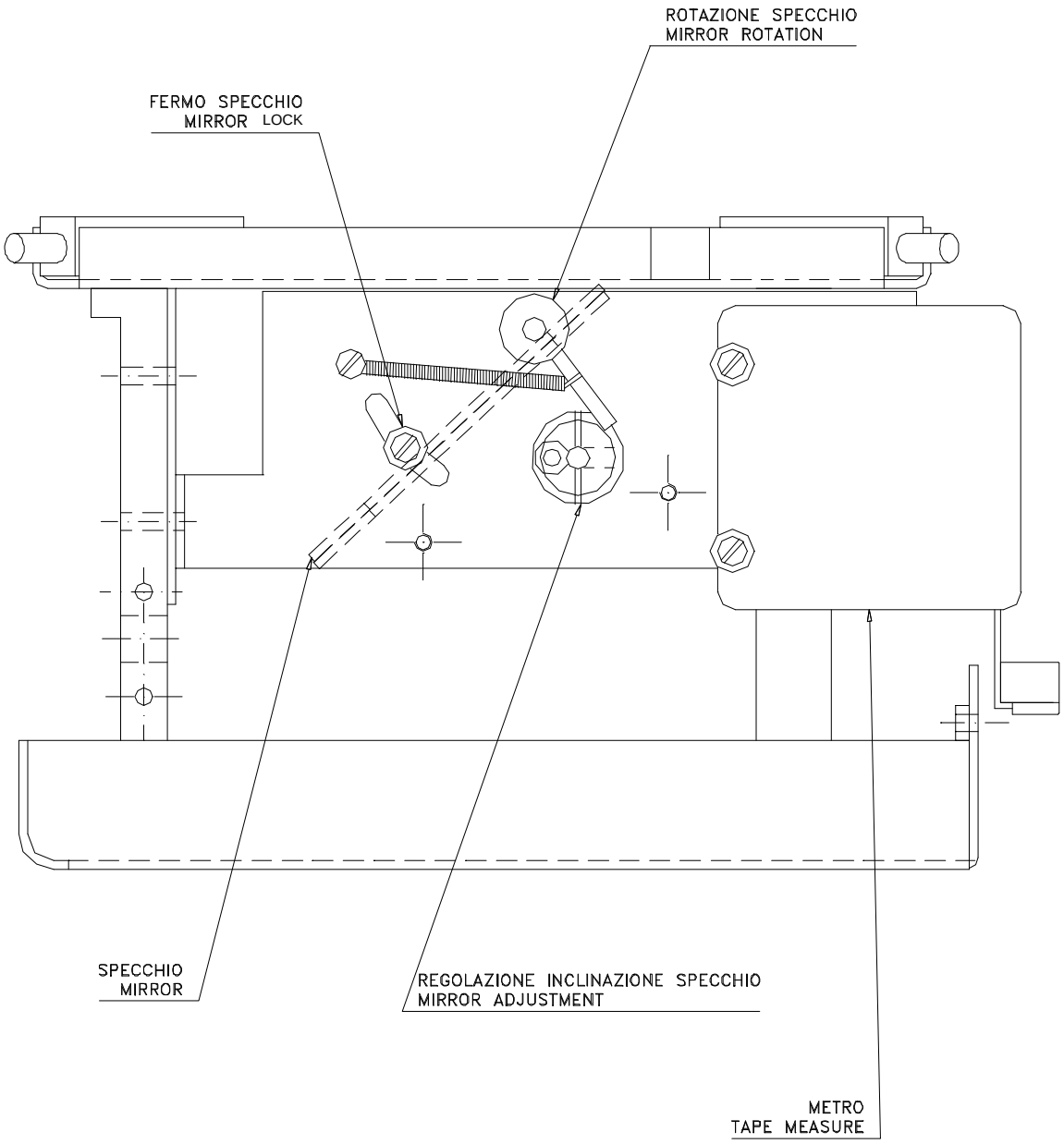
ROTAZIONE SPECCHIO
MIRROR ROTATION
FERMO SPECCHIO
MIRROR LOCK
SPECCHIO
MIRROR
REGOLAZIONE INCLINAZIONE SPECCHIO
MIRROR ADJUSTMENT
METRO
TAPE MEASURE

Figure 3

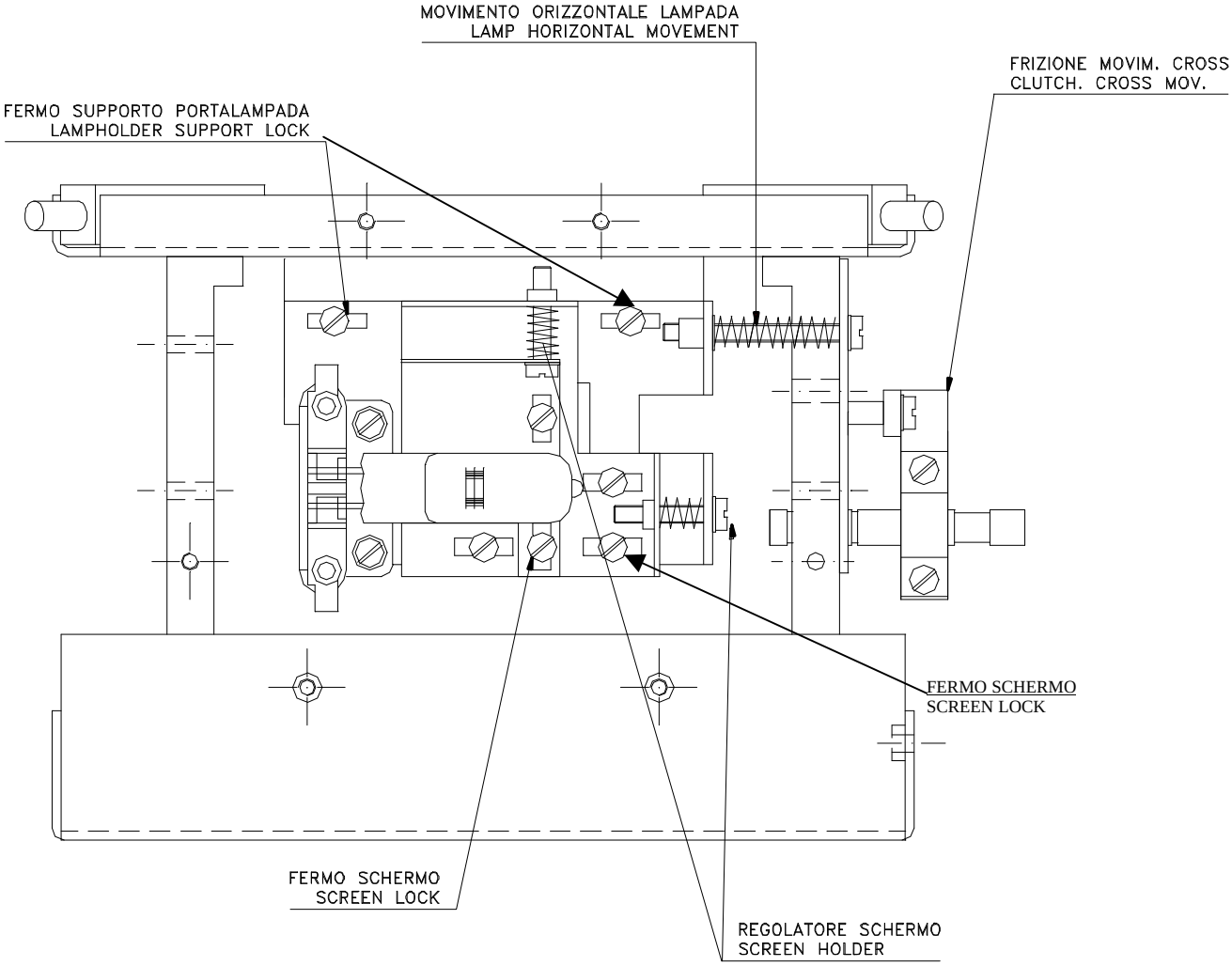
MOVIMENTO ORIZZONTALE LAMPADA
LAMP HORIZONTAL MOVEMENT
FRIZIONE MOVIM. CROSS
CLUTCH. CROSS MOV.
FERMO SUPPORTO PORTALAMPADA
LAMPHOLDER SUPPORT LOCK
FERMO SCHERMO
SCREEN LOCK
FERMO SCHERMO
SCREEN LOCK
REGOLATORE SCHERMO
SCREEN HOLDER

Figure 4

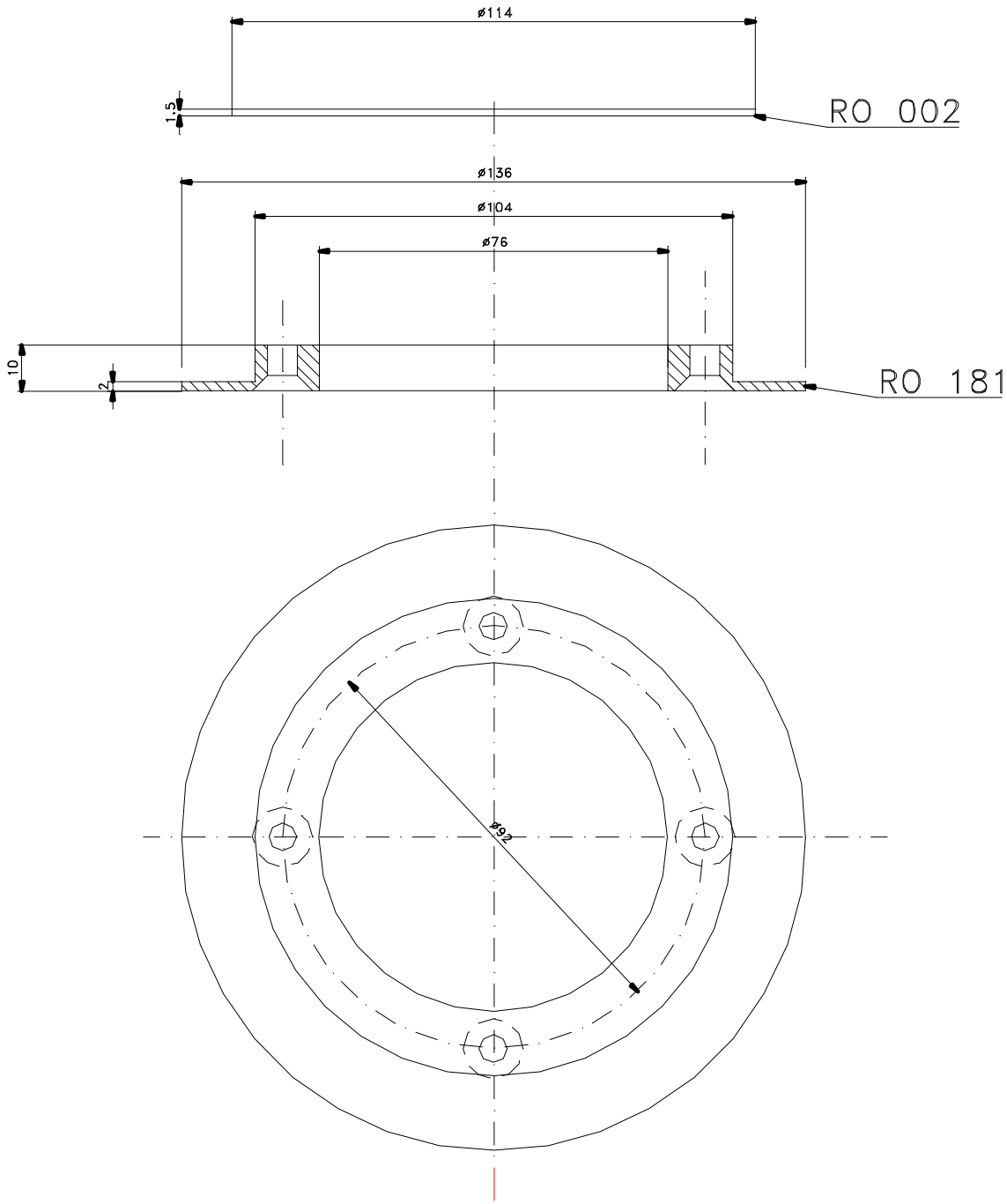

Figure 5 - Parts Breakdown

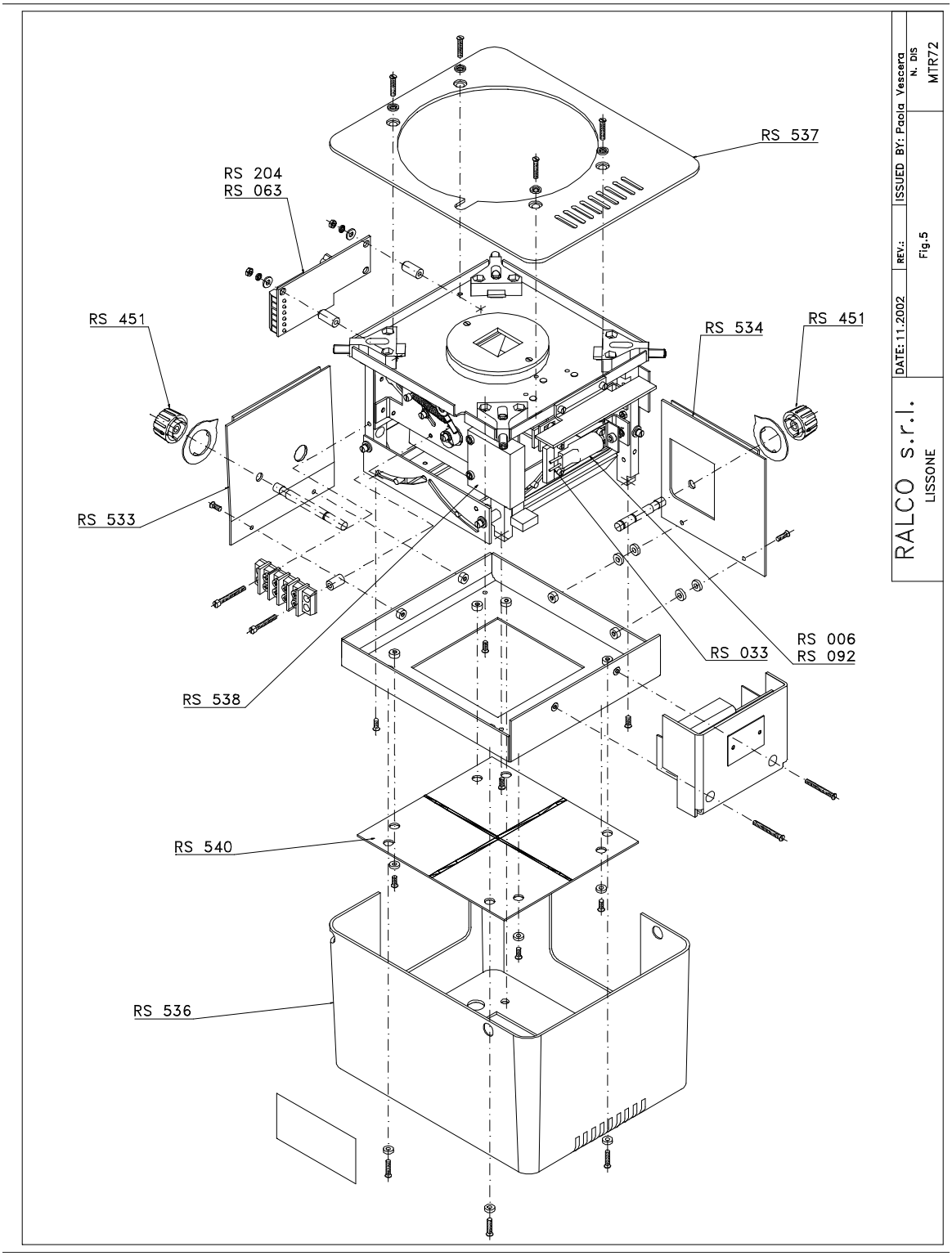

Diagram 1 -Wiring R72/170A.

POSIZ.	DENOMINAZIONE	N° PEZZI	N° DISEGNO
E	PROTECTION EARTH	1	MP11772
O	EXTERNAL CABLE 3x1.5mmq UL certicated	1	GE00106
LH	LAMP HOLDER 905-3442	1	MP11721
LAMP	ALOGEN LAMP 24V 100W	1	MP11737
M1	2 WAYS TERMINAL	1	MP11349

REVISIONI: REV. | DATA | DESCRIZIONE

DISEGNATO: Paola Vescera
CONTROLLATO Pagani Giovanni
PROGETTO:
QUALITA':
Ralco s.r.l.
DATA: 22.02.01 PAG. 2 di 2 FORMATO: A4
DENOMINAZIONE
ELECTRICAL WIRING
R 72/170
N. COD.
72E004

QUESTO DISEGNO E' PROPRIETA' ESCLUSIVA DELLA RALCO s.r.l. A TERMINI DI LEGGE ESSA VIETA DI RIPRODURLO O COMUNICARLO A DITTE CONCORRENTI O AD ALTRI SENZA LA SUA ESPLICITA APPROVAZIONE.

POSIZ.	DENOMINAZIONE	N° PEZZI	N° DISEGNO
E	PROTECTION EARTH	1	MP11772
O	EXTERNAL CABLE 3x1.5mmq UL certicated	1	GE00106
LH	LAMP HOLDER 905-3442	1	MP11721
LAMP	ALOGEN LAMP 24V 100W	1	MP11737
M1	2 WAYS TERMINAL	1	MP11349

REVISIONI: REV. | DATA | DESCRIZIONE

DISEGNATO: Paola Vescera
CONTROLLATO Pagani Giovanni
PROGETTO:
QUALITA':
Ralco s.r.l.
DATA: 22.02.01 PAG. 2 di 2 FORMATO: A4
DENOMINAZIONE
ELECTRICAL WIRING
R 72/170
N. COD.
72E004

QUESTO DISEGNO E' PROPRIETA' ESCLUSIVA DELLA RALCO s.r.l. A TERMINI DI LEGGE ESSA VIETA DI RIPRODURLO O COMUNICARLO A DITTE CONCORRENTI O AD ALTRI SENZA LA SUA ESPLICITA APPROVAZIONE.

INFORMATION FOR THE MANUFACTURER

THE FOLLOWING FORM IS PROVIDED FOR YOUR COMMENTS AND SUGGESTINGS WITH REGARDS TO THE COLLIMATOR SO THAT WE MAY ENSURE AND IMPROVE THE QUALITY OF OUR PRODUCTION.

SHOULD YOU HAVE ANY COMMENTS AND/OR SUGGESTIONS, PLEASE MAIL THE FORM, POST-FREE, TO Ralco VIA SCHIAPPARELLI 27/33, 20035 LISSONE (MI)

DATA:

CUSTOMER:

ADDRESS:

INFORMATION REGARDING POSSIBLE ACCIDENTS THAT MAY HAVE OCCURRED WHILE USING THE COLLIMATOR.

DIRECTIVE 93/42/CEE STATES THAT ACCIDENTS (SUCH AS DEATH OF GREVIOUS INJURY) THAT INVOLVE THE COLLIMATOR DESCRIBED HEREIN, MUST BE REPORTED TO THE MINISTRY OF HEALTH AND TO THE MANUFACTURER.

THE PRESENT FORM IS PROVIDED TO REPORT TO Ralco , POST-FREE, ACCIDENTS OF THE TYPE STATED IN THE DIRECTIVE.

DATE:

CUSTOMER: ADDRESS: